SCHRADER PACIFIC
Tire Hardware Solutions

AFTERMARKET PRODUCTS CATALOGUE

GB

This catalogue presents the Schrader Pacific Tire Hardware Solutions products sold when it was released. It is a working tool for professionals who will find in it the most commonly used valves, accessories, tools and equipment for garages.
We provide some technical information to help you use the products under optimal conditions and thus facilitate your maintenance operations. Our technical and sales teams are at your service to provide you the support you need.

Terms and Conditions of Sale

By submitting an order, you accept the terms and conditions of sale regarding our prices and invoices. The terms and conditions may not under any circumstances be cancelled by contrary terms and conditions of sale.

Updates

Schrader S.A.S. reserves the right to make any modifications deemed appropriate to this catalogue or the products themselves without prior notification. You will find in our price list the exact list of products sold. Our customer service department is here to help you with any specific procurement or training issues.

Presentation

1 Passenger vehicle valves

2 Truck spuds and extensions

3 Farm Vehicle and EM valves

4 Cores and caps
Air conditioning products

5 Balancing products

6 Inflation and compressed-air equipment

7 Tire and inner tube repair products and parts

8 Repair tools and vulcanization equipment

9 Garage equipment, assembly products,
tools and PPE

10 Construction equipment

11 ETRTO index
Reference index: alphabetical and numerical

HOW TO PLACE YOUR ORDER

Request your login and password to access your e**shop.schrader-pacific.fr** account for the "Tire equipment and consumables" category.

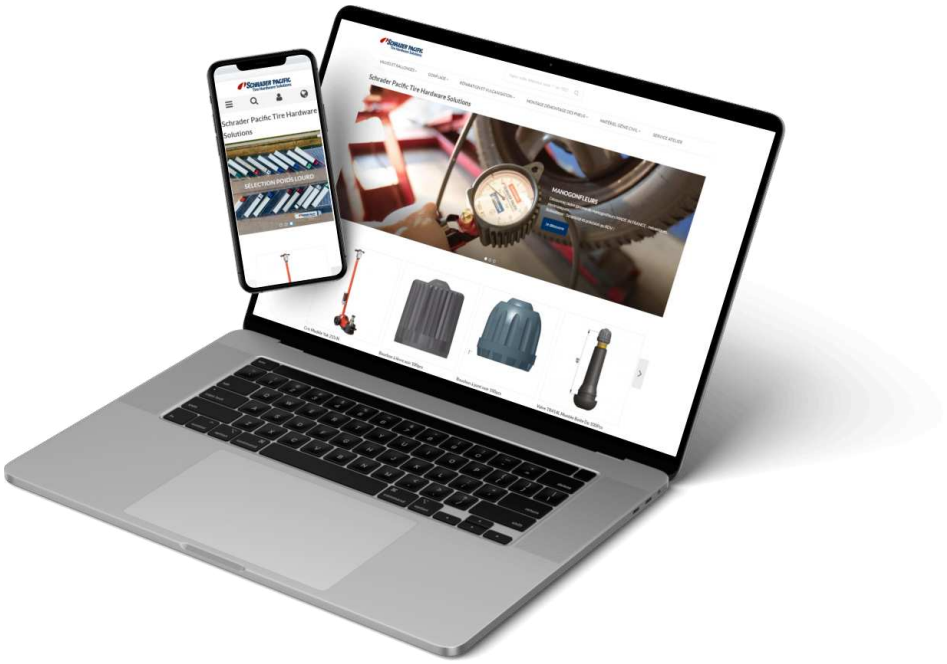

www.eshop.schrader-pacific.fr

To avoid any confusion when placing your order, we recommend that you include, FOR EACH PRODUCT:

- **the complete Schrader Pacific Tire Hardware Solutions reference**, e.g.: **39000-00**
- **the Description**, e.g.: "MASTAIR tire inflator gauge in bar"
- **the quantity ordered**.

The packaging indicated on our prices may not be broken into fractions. We thus reserve the right to round the quantity requested up to the quantity that is the next highest standard multiple.

CUSTOMERS France

Call Center:

Tel. 03 81 38 56 60

Fax +33 (0)3 81 38 56 81

Tire specialists and automobile distributors.

In France, and on customer request, any order for products in stock received before 3 p.m. can be delivered within 24 hours.

EXPORT CUSTOMERS

Call Center:

Tel. +33 (0) 381 38 56 27

Fax +33 (0)3 81 38 56 81

Network of distributors in Europe, Africa, the Middle East, the Far East and Asia.

TECHNICAL INFORMATION ABOUT THE PRODUCT

	Technical information about the product
	Product standards
11.5	Diameter of the rim hole
WWW	Website for more information
	Video available / Update via Internet
	Intra-Schrader Pacific Tire Hardware Solutions or on-site training
+30°C +15°C	Part storage: Store parts, products and liquids away from light, in a dry, clean place and adhere to storage temperatures
HQ	High-Quality product
PREMIUM	Premium Range and Better quality-price ratio
	Spare parts
	Schrader Pacific Tire Hardware Solutions After Sale Service
	Destruction in accordance with Directive 2022/96/EC
	Expiration date
Zn ZAMAK Fe ACIER Pb PLOMB	Identification of the different types of weights
FDS	Safety sheet available
	Instructions on demand or on shop.schrader-pacific.fr
	Appropriate Personal Protection Equipment
	Trick product
	Light product
	Product favourites

TRAINING IN PONTARLIER & ON SITE

Training in Pontarlier & on site :
Personalised service, customised offer

- Training centre recommended for professional training. Declaration registered under No. 43 25 01928 25 with the local government of the Franche-Comté Region.
- TPMS pressure sensors (repair, mounting, programming)
- Cold and hot tire repair
- Mounting and dismounting of tires.

Our technical expertise

Published every 2 months, the technical bulletin is an opportunity for Schrader Pacific Tire Hardware to share knowledge, expertise and know-how.

Focus on the technical aspect of the products: the strong points, the rules of good use, the specificities, scenarios.

AFTER-SALES SERVICE

After-sales service : A trained & experienced aftersales team

Mounting, calibration, repair and maintenance:
- Pressure gauges
- Hydropneumatic jacks
- Tire regroover
- Civil engineering and agricultural mounting tools
- Torque wrenches

For non-manufactured products, Schrader Pacific Tire Hardware Solutions has obtained tool supplier approvals for internal aftersales services.

Service SAV Schrader SAS
Quai n° 2 - Rue Jean Mermoz
25300 Pontarlier - France
France => Tel.: +33 (0) 381 38 56 60
International => Tel.: +33 (0) 381 38 56 27

Chapter 1

Snap-in type rubber tubeless valve ORIGINAL
Schrader Pacific Tire Hardware
Solutions, 50 years of experience= Quality & safety.

QUALITY AND SAFETY.

With its experience in new vehicle fitting with automobile manufacturers and tire manufacturers, Schrader Pacific Tire Hardware Solutions offers in the aftermarket a complete range of tubeless valves compliant with ETRO and ISO standards.

VALVE REPLACEMENT AND MAINTENANCE.

why ?

Valves are subject to a lot of strain :

- Bending from centrifugal force
- Extreme temperature change due to their close proximity to brake drums or discs
- Poor weather conditions and salty air, road salt, etc.
- Natural ageing of the rubber
- Corrosion of aluminium valves
- Hydrocarbons

MANUFACTURING AND LABORATORY TESTS.

Approved and proven quality system.

Rubber valves:

- Automatic 100% airtightness controls in production
- Ozone, bending and impact-proof
- Airtightness at temperatures from -40 to + 100°C
- Blowout, placement and tear-off tests
- Over-pressure tests carried out at 13 bar for 2 mins.

Metal valves:

- Resistance to mechanical stresses
- Resistance to saline mist

PARTS DRAWINGS :
The valves, valve cores and caps are shown in the catalogue **to scale**.

CAR VALVES

TRADITIONAL CAR VALVES

- Rubber tubeless valves (snap-in) 8

  TR412 - TR413 - TR414 - 414L - TR418.

- High-pressure rubber tubeless valves (snap-in). 9

  TR600HP - TR801HP.

  HP tubeless with nickel-coated brass base.

- Rubber tubeless valves for inner tube 10

  TR13 - TR15 and ring.

- Metal tubeless valves in raw brass or in nickel-coated brass (clamp-in) 11

  1533 - TR430 - TR416S - Especially for campers.

- Metal tubeless valves in nickel-coated brass (clamp-in) 11

  TR416S.

- Light alloy tubeless valves (clamp-in) ..... 11 - 12

RUBBER TUBELESS VALVES

11,5 | COLD MAX 4,5bar | MAX SPEED 210km/h

Valves mounting tools ref. S-4032-1 or 65027-67:
- Check that rim holes are free from burrs and have a smooth, flat rust-free surface.
- NB : rubber valves must be mounted on all rim types (aluminium or steel) having a minimum thickness of 1,8 min. at maxi 3,5 mm.
- Very strong tools.
- Over-pressure tests carried out at 13 bar.
- Cold and heat resistance -40° to +100°C.

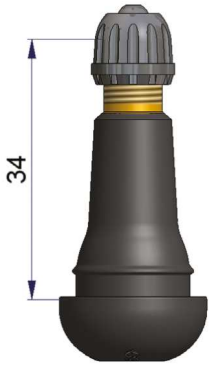

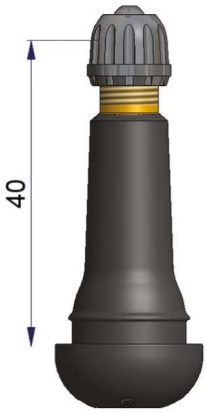

	TR 412 (V2.03.6)	Quantity per box	Packs of 100 per box
(L)	S-4040-2	10	
(L)	S-4040-3	100	
(L)	S-4040-55		5 or 10
(A)	66501-80		10

	TR 413 (V2.03.1)	Quantity per box	Packs of 100 per box
(C)	R-1496-2	10	
(C)	R-1496-3	100	
(L)	S-4636-55		10
(A)	66504-80		10

	TR 414 (V2.03.2)	Quantity per box	Packs of 100 per box
(C)	R-0756-2	10	
(C)	R-0756-3	100	
(L)	S-4638-55		10
(A)	66507-80		10

(C) OE valves assembled complete with core and plastic cap.
(L) Standard AM valves assembled with core and sealing cap.
(A) Standard AM valves delivered paired (core and cap not mounted).

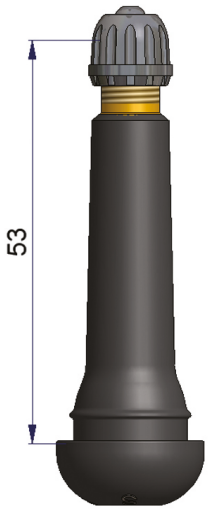

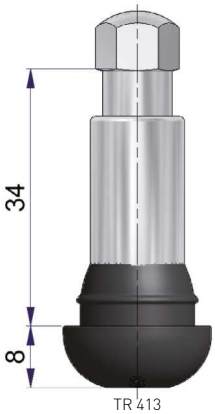

TR 413

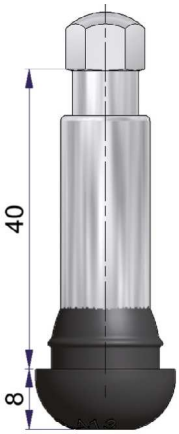

TR 414

	414 L (V2.03.8)	Quantity per box	Packs of 100 per box
(C)	R-1878-2	10	
(C)	R-1878-3	100	
(L)	S-4640-55		10
(A)	35167-69		10

	TR 418 (V2.03.4)	Quantity per box	Packs of 100 per box
(C)	R-1799-2	10	
(C)	R-1799-3	100	
(L)	S-4642-55		5 or 10
(A)	66513-80		10

	TR 438 (V2.03.5)	Quantity per box
(L)	65265-69	100

TR 413 Chrome-plated	Quantity per box	Packs of 100 per box
66505-68	10	
66505-69	100	
66505-80		10

TR 414 Chrome-plated		
66508-69	100	
66508-80		10

SCHRADER PACIFIC Tire Hardware Solutions

HIGH-PRESSURE RUBBER TUBELESS VALVES

Standard AM valves assembled with core and cap.

OE
approved Valves

11,5 COLD MAX 5,5 bar

16 COLD MAX 7 bar

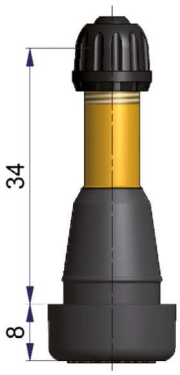

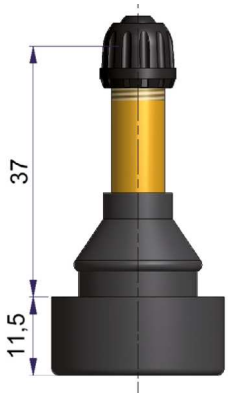

TR 600 HP (V3.23.1)	Quantity per box
43025-68	10
43025-69	100
43025-72	500
43025-80	1000

TR 801HP	Quantity per box
65664-68	10

TR 13	Designation	Quantity per box
R-0990-2	Intermediate ring for the assembly of TR 13 valves in a 16mm rim hole.	10
R-0990-3		100

Standard AM valves assembled with core and cap.
• OE approved nickel-coated brass valves.

11,5 COLD MAX 14 bar

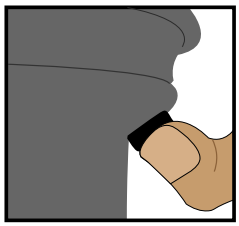

* Quick installation valves with your finger

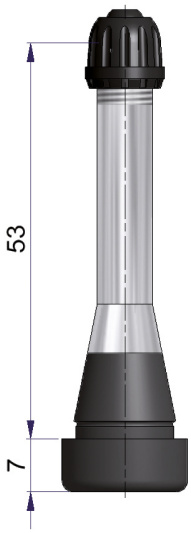

*	Quantity per box
65752-68	10
65752-69	100

*	Quantity per box
65753-68	10
65753-69	100

*	Quantity per box
65754-68	10
65754-69	100

BRASS TUBELESS VALVES

(L) Standard AM valves assembled with core and sealing cap.

11,5

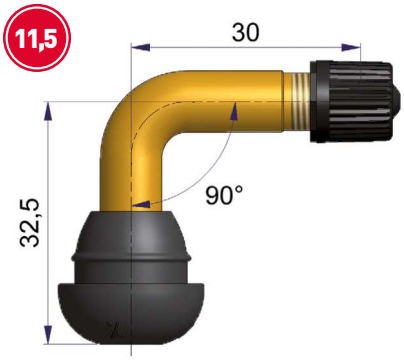

16

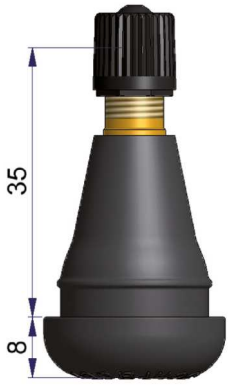

TYPE Scooter	Quantity per box
41558-68	10

	TR 415 (V2.03.3)	Quantity per box	Packs of 100
(L)	S-4156-2	10	
(L)	S-4156-3	100	
(L)	S-4156-55		10

TUBELESS VALVES OR VALVES FOR INNER TUBES AND EXTENSION

• High speeds (top-of-the-line vehicles) : at high speeds, valves are subjected to stress due to the centrifugal force.
• Metal clamp-in tubeless valves are recommended for intensive use
• Replace the sealing washer each time you remove the tire

8,5

Nut tightening torque : 3 to 5 N.m.

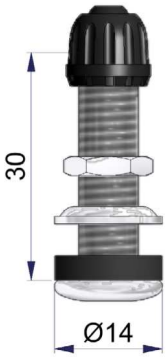

9,7

Nut tightening torque : 12 to 15 N.m.

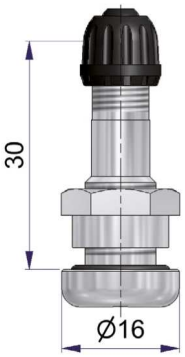

11,5

Nut tightening torque : 3.5 to 4.6 N.m.

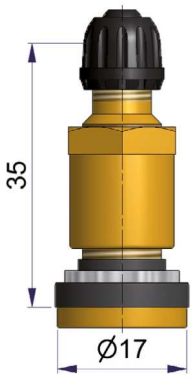

TR 430 (V1.11.1) For motorcycles	Quantity per box	Spare washer
S-4043-2	10	2 Seals 35127-68

Nickel-coated	Quantity per box	Spare washer
R-1533-2	10	R-1419-2

TR 416-S	Quantity per box
R-2103-2	10

SCHRADER PACIFIC Tire Hardware Solutions

METAL TUBELESS VALVES

LIGHT ALLOY (FOR LIGHT ALLOY WHEELS)

8,5

Nut tightening torque : 7 to 10 N.m.

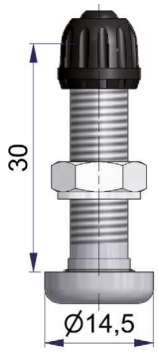

(V1.10.1) For motorcycles	Quantity per box
R-1674-2	10

8,5

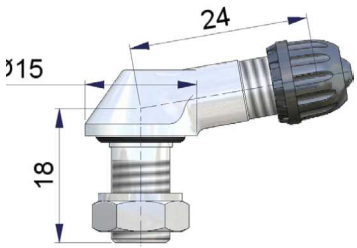

For motorcycles	Quantity per box
42396-67	1

NICKEL-COATED BRASS

11,5

Also suitable for Michelin alu truck wheels.

Nut tightening torque : 3 to 6 N.m.

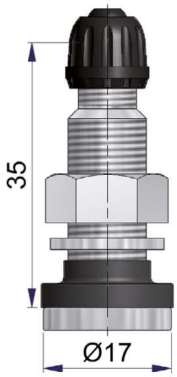

TR 416-S (V2.05.1)	Quantity per box	Spare washer
S-4042-2	10	35440-68

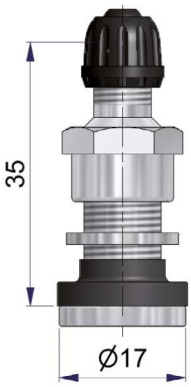

TR 416-S (V2.05.1)	Quantity per box
S-4042-G	10

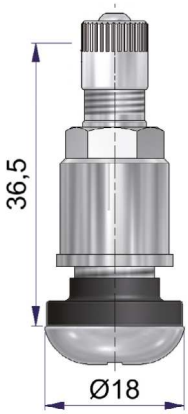

TR 416-S	Quantity per box	Spare washer
42039-68	10	35440-68
42039-69	100	

METAL TUBELESS VALVES

LIGHT ALLOY (FOR LIGHT ALLOY RIMS)

Nut tightening : 10 to 12 N.m.

11,5 MAXI 210 km/h

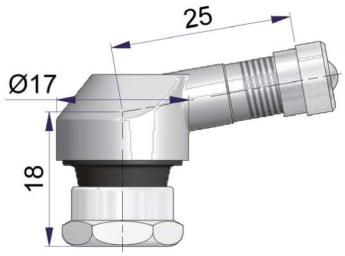

For motorcycles angled	Quantity per box
65252-68	10

11,5

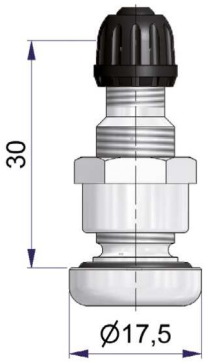

(V2.04.1)	Quantity per box	Spare washer
R-1446-2	10	R-1524-2

9,7

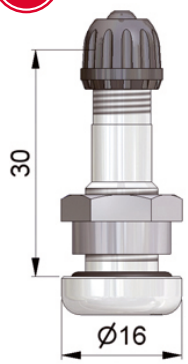

	Quantity per box	Spare washer
R-1578-2	10	R-1419-2

FOR LIGHT COMMERCIAL AND CAMPERS

11,5 PRESSIONS >4,5 bar POSSIBLES

Nut tightening torque : 12 to 15 N.m.

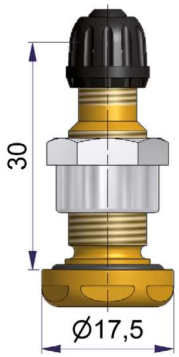

(V2.04.1)	Quantity per box	Spare washer
R-1510-2	10	R-1524-2

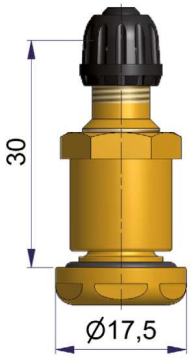

	Quantity per box	Spare washer
R-1914-2	10	R-1524-2

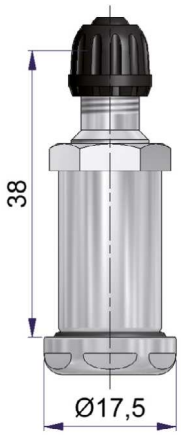

Nickel-coated	Quantity per box
65765-68	10

SCHRADER PACIFIC Tire Hardware Solutions

Chapter 2

TUBELESS VALVES SCHRADER PACIFIC TIRE HARDWARE SOLUTIONS GUARANTEED RELIABILITY.

The assembly of tubeless tires can be compromised by the use of an unsuitable valve. Thanks to their manufacturing quality, Schrader Pacific Tire Hardware Solutions' tubeless valves for trucks provide the best guarantees.

Schrader Pacific Tire Hardware Solutions offers a complete range for each rim type. Automatic in-process control : dimensions, leaktightness, for 100% of parts. Testing of material strength in laboratory (behaviour in overpressure and different temperature conditions).

TRUCK VALVES SPUDS AND EXTENSIONS

- Tubeless valves for drop-centre rims 16
  Rim hole 9.7 mm
- Tubeless valves in nickel-coated brass for ALCOA® * rims ..... 17 - 19
  Rim hole 9.7 mm
- Tubeless valves for drop-centre rims 19
  Rim hole 16 mm
- Tubeless valves for drop-centre rims ..... 20 - 21
  Rim hole 20.5 mm
- Nickel-coated valves with guiding flange 22
- Valves for inner tubes (universal screw-on) 23
- Spuds for universal screw-on valves 24
- Flexible extensions and clamping lugs 31
- Rigid plastic extensions 32
- Rigid brass extensions 33
- Loose wheel nut indicators 34

CHECKPOINT® - DUSTITE® - CHECKLINK®- CHECKLOCK® - SAFEWHEEL™
* ALCOA: protected trademark, property of ALCOA

BRASS TUBELESS VALVES

DROP-CENTRE RIMS

9.7

- Nut tightening torque : 12 to 15 N.m.
- Replace the O-ring each time you remove the tire.

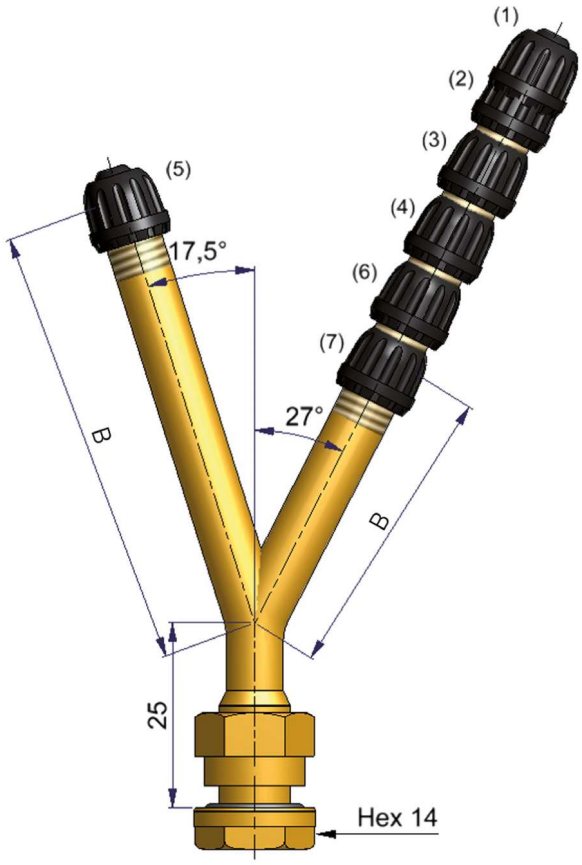

		ETRTO no.	B	Quantity per box	Spare washer
(1)	R-1487-2	(V3.20.6)	85	10	R-1419-2
(1)	R-1487-3	(V3.20.6)	85	100	
(1)	R-1487-7	(V3.20.6)	85	250	
(2)	R-1898-2		80	10	
(2)	R-1898-3		80	100	
(2)	R-1898-7		80	250	
(3)	R-1680-2	(V3.20.12)	70	10	
(3)	R-1680-3	(V3.20.12)	70	100	
(3)	R-1680-7	(V3.20.12)	70	250	
(4)	R-1485-2	(V3.20.4)	60	10	
(4)	R-1485-3	(V3.20.4)	60	100	
(4)	R-1485-7	(V3.20.4)	60	250	
(5)	R-1798-2	(V3.20.2)	60	10	
(6)	R-1500-2	(V3.20.7)	50	10	
(7)	R-1486-2	(V3.20.5)	40	10	
(7)	R-1486-3	(V3.20.5)	40	100	
(7)	R-1486-7	(V3.20.5)	40	250	

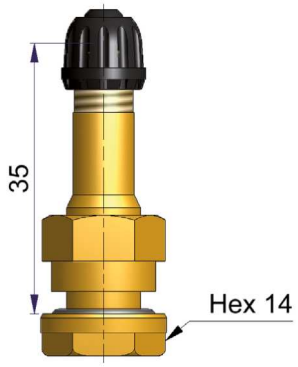

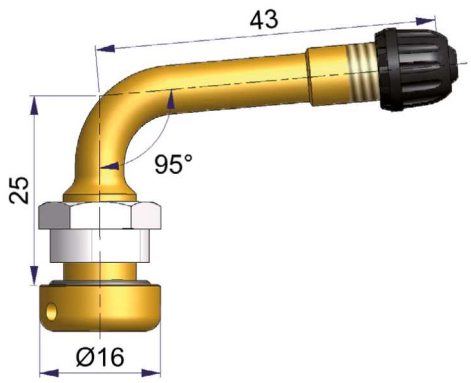

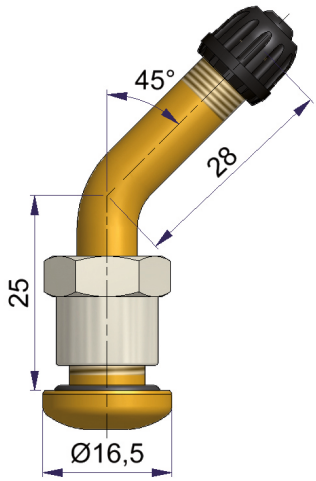

(V3.20.1)	Quantity per box	Spare washer
R-0964-2	10	R-1419-2
R-0964-3	100	
R-0964-7	250	

	Quantity per box	Spare washer
R-2021-2	10	R-1419-2

(V3.22.1)	Quantity per box	Spare washer
R-2123-2	10	R-1419-2
R-2123-3	100	
R-2123-7	250	

Valve with oval shape foot for vehicles equipped with Mercedes (Actros), Scania, Man, Volvo disc brakes. Zinc bichromate nut.

SCHRADER PACIFIC Tire Hardware Solutions

TUBELESS VALVES IN NICKEL-COATED BRASS - ALCOA® ALLOY RIMS

DROP-CENTRE RIMS

9.7

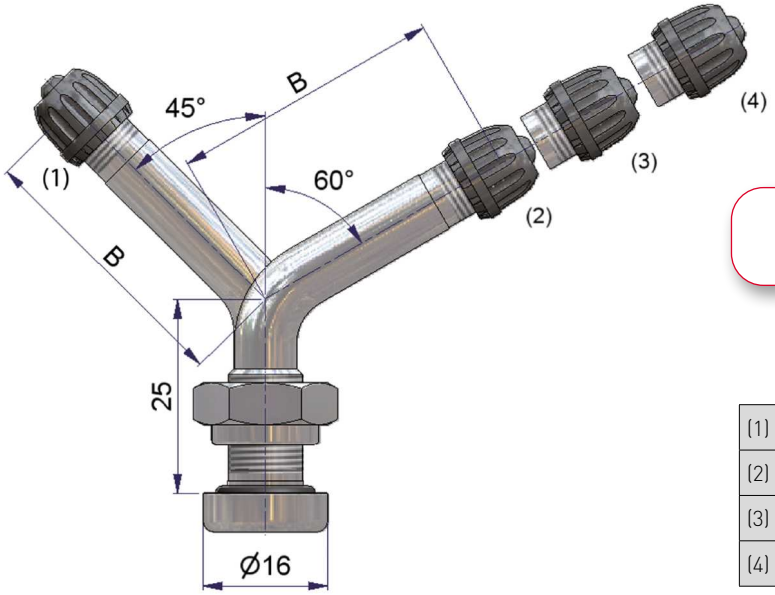

• Nut torque : 10 to 12 N.m.
• Replace the O-ring each time you remove the tire

		TR no.	B	Quantity per box	Spare washer
(1)	33645-68	TR 543 C	35	10	41361-68
(2)	S-4295-2	TR 543 D	35		
(3)	S-4297-2	TR 544 D	50		
(4)	42132-68	TR 545 D	66		

• Nut torque : 12 to 15 N.m.
• Replace the O-ring each time you remove the tire

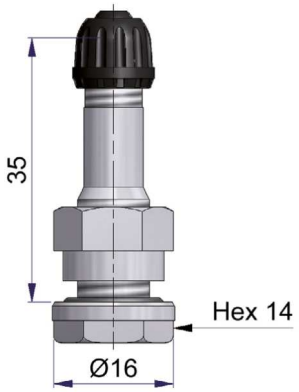

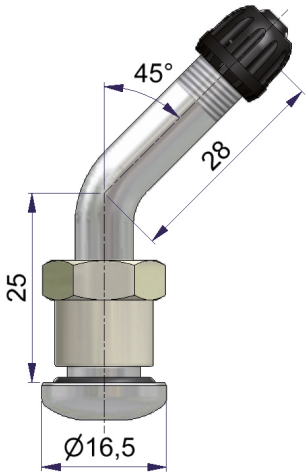

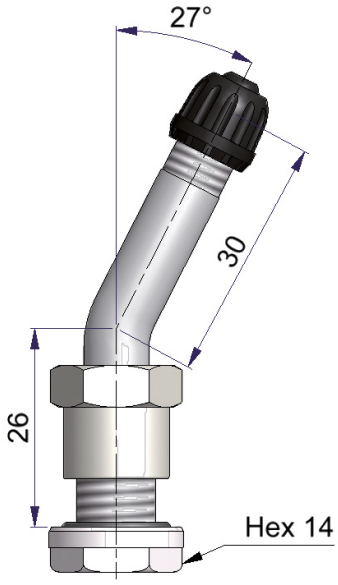

(V3.20.1)	Quantity per box	Spare washer
41534-68	10	R-1419-2

(V3.22.1) 2123 nickel-coated	Quantity per box	Spare washer
42729-68	10	R-1419-2

	Quantity per box	Spare washer
42168-68	10	41686-68

TUBELESS VALVES IN NICKEL-COATED BRASS - ALCOA® ALLOY RIMS

FOR DROP-CENTRE RIMS

9.7

Nut tightening torque : 9 to 16 N.m.

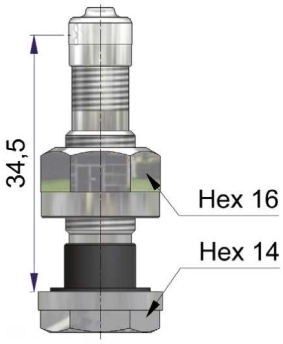

Alcoa 40 MS-00N	Quantity per box
65769-68	10

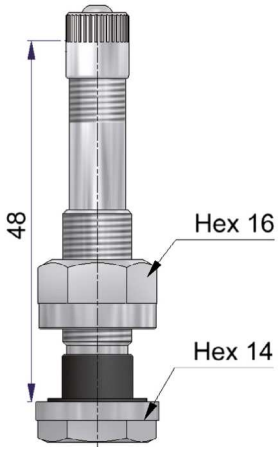

Alcoa 54 MS-00N	Quantity per box
65757-68	10

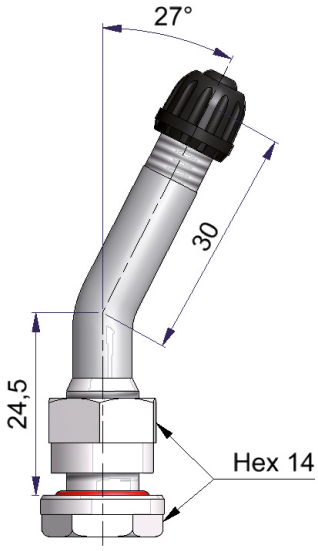

Alcoa 60 MS-00N	Quantity per box	Spare washer
41684-68	10	41686-68

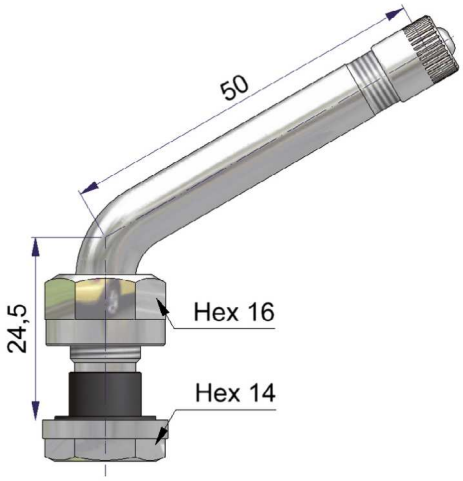

TR 554 D	Quantity per box
65760-68	10

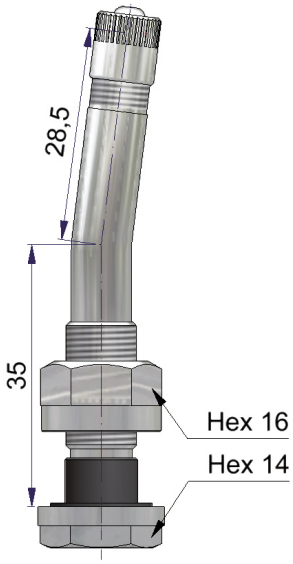

Alcoa 70 MS-07N2	Quantity per box
65758-68	10

SCHRADER PACIFIC
Tire Hardware Solutions

TUBELESS VALVES

FOR DROP-CENTRE RIMS

16

Nut tightening torque : 4 to 6 N.m.

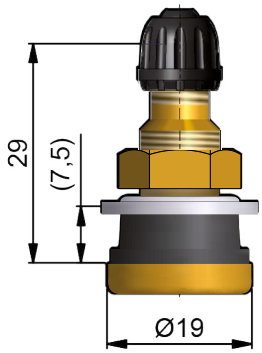

		TR no.	ETRTO no.	A	Quantity per box	Spare washer
(1)	R-2027-2	TR 575	(V3.21.1)	29	10	37519-68
(1)	R-2027-7	TR 575	(V3.21.1)	29	250	
(2)	S-4591-2	TR 501	(V3.21.2)	38	10	

TR 575 (V3.21.1) Short washer	Quantity per box	Spare washer
41788-68	10	35439-68

Nut tightening torque :
13 to 15 N.m.

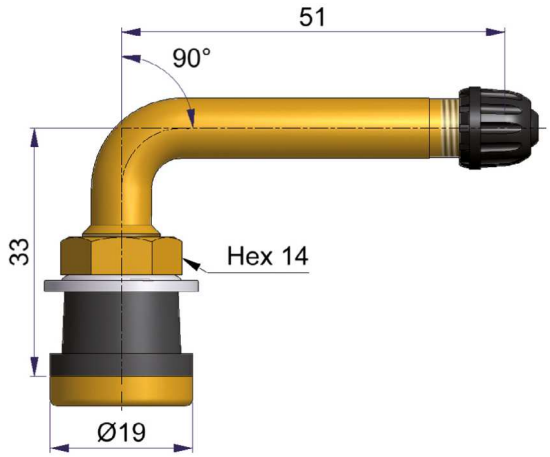

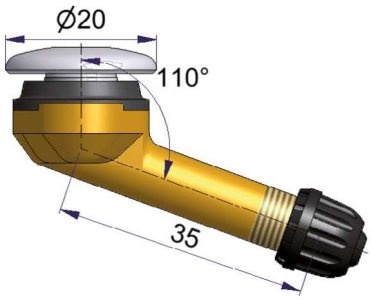

TR 570 C (V3.21.9)	Quantity per box	Spare washer
41518-68	10	37519-68

Scania Valve	Quantity per box
R-2112-2	10

FOR DROP-CENTRE RIMS 16

Nut tightening torque : 33 to 37 N.m.

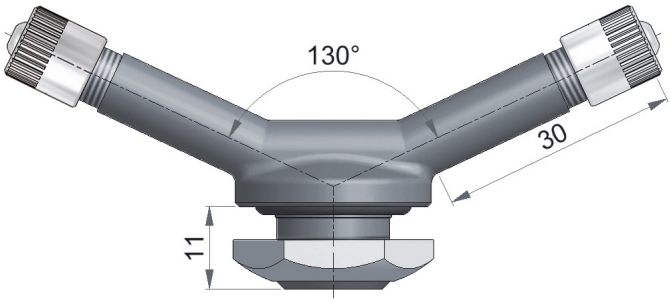

	Quantity per box	Spare washer
R-1581-1	1	R-1421-2
R-1581-2	10	

FOR DROP-CENTRE RIMS 16

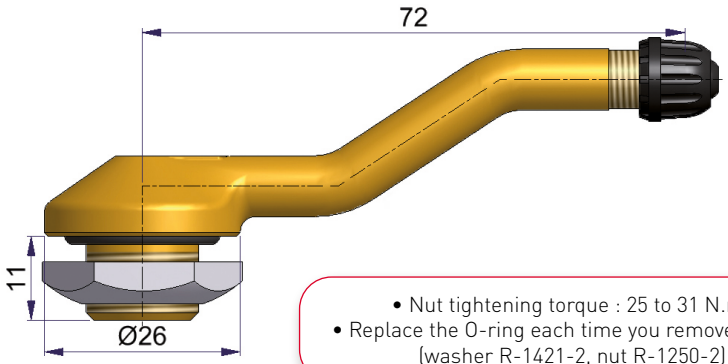

- Nut tightening torque : 25 to 31 N.m.
- Replace the O-ring each time you remove the tire. (washer R-1421-2, nut R-1250-2)

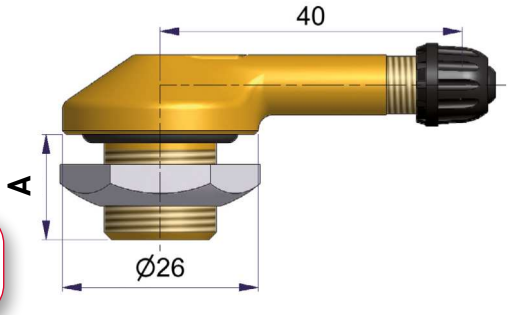

(V3.14.1)	Quantity per box
R-0806-2	10

	ETRTO no.	A	Quantity per box
R-1294-2	(V3.12.1)	11	10
R-1294-7	(V3.12.1)	11	250

SCHRADER PACIFIC Tire Hardware Solutions

TUBELESS VALVES

FOR DROP-CENTRE RIMS

16

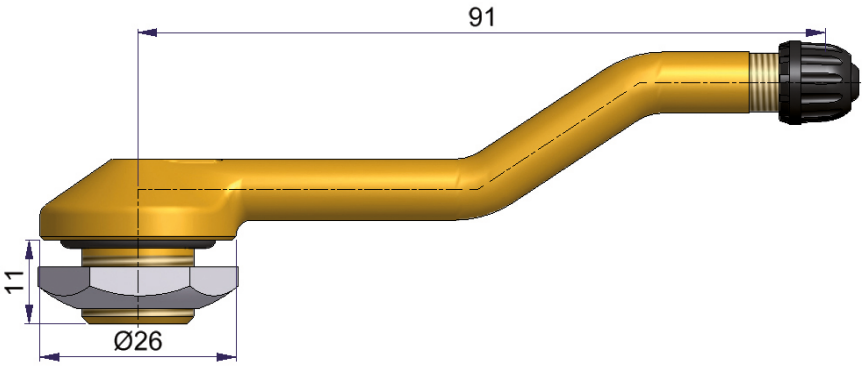

(V3.14.2) (For 11 x 22.5)	Quantity per box
R-0808-2	10

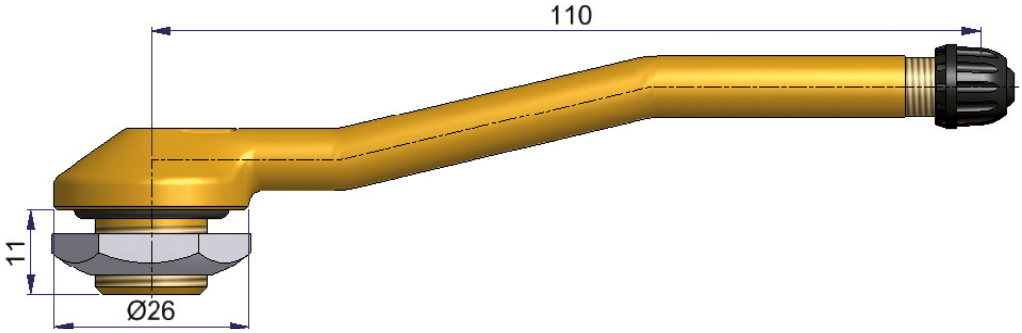

	Quantity per box
R-1632-2	10

FOR FLAT RIMS

20.5

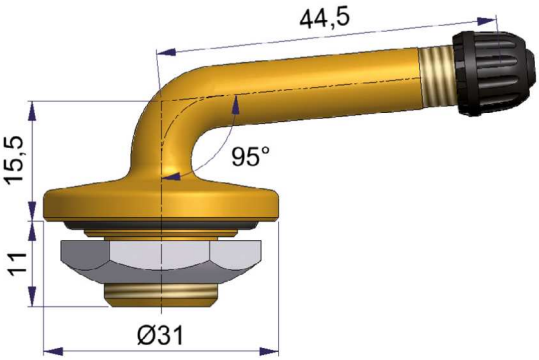

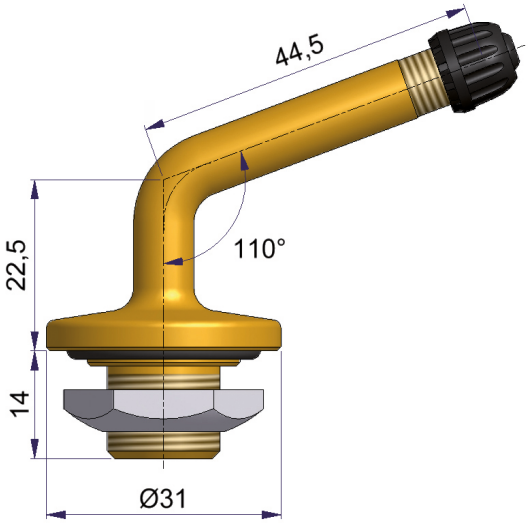

(V3.15.2) For underground	Quantity per box
R-1051-2	10

(V3.15.1) For underground	Quantity per box
R-1089-2	10

TUBELESS VALVES

FOR FLAT RIMS

20.5

- Nut tightening torque : 25 to 31 N.m.
- Replace the O-ring each time you remove the tire. (washer R-1421-2, nut R-1250-2)

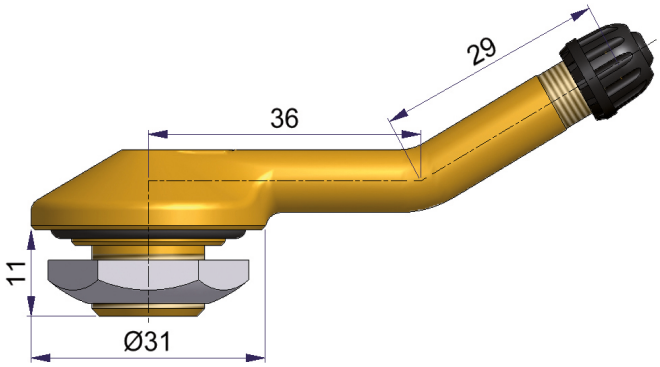

(V3.16.1)	Quantity per box
R-1013-2	10

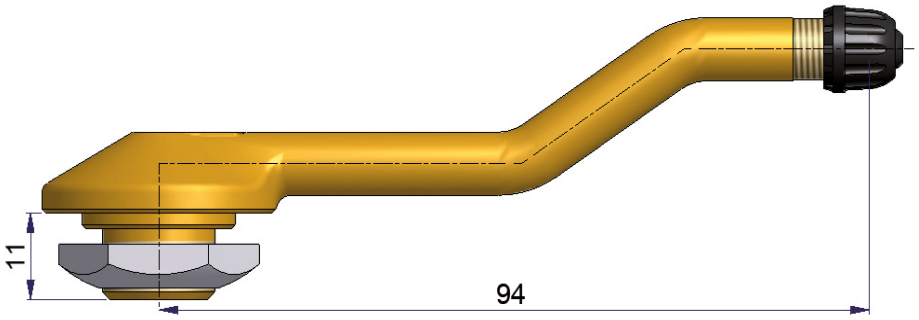

	Quantity per box
R-0915-2	10

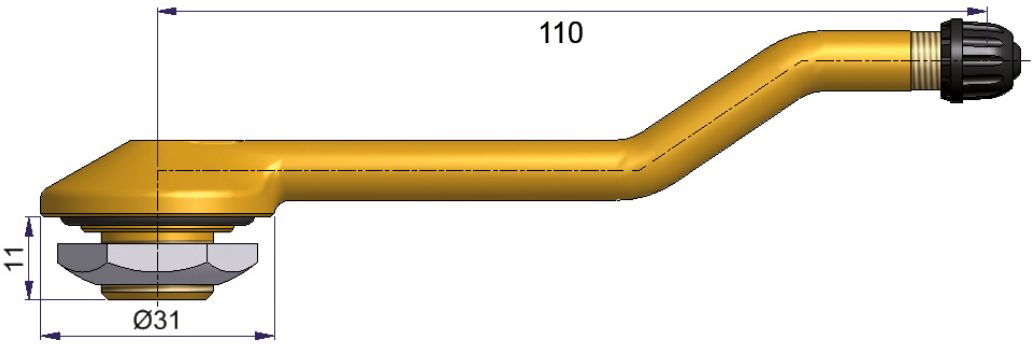

(V3.18.1)	Quantity per box
R-0907-2	10

SCHRADER PACIFIC
Tire Hardware Solutions

TUBELESS VALVES

FOR FLAT RIMS

20.5

- Nut tightening torque : 25 to 31 N.m.
- Replace the O-ring each time you remove the tire.
(washer R-1421-2, nut R-1250-2)

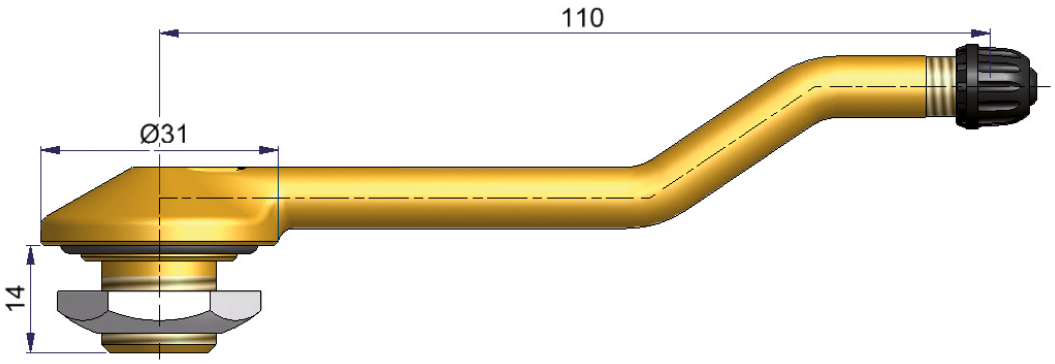

	Quantity per box
R-1549-2	10

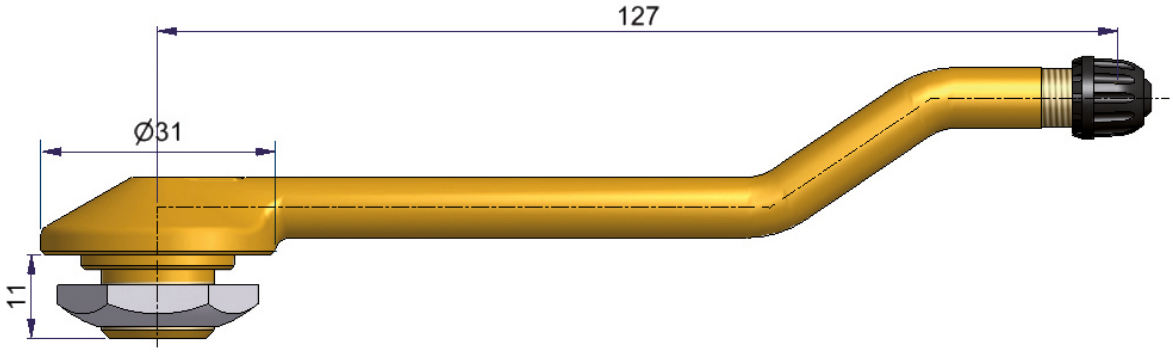

(V3.18.2)	Quantity per box
R-0920-2	10

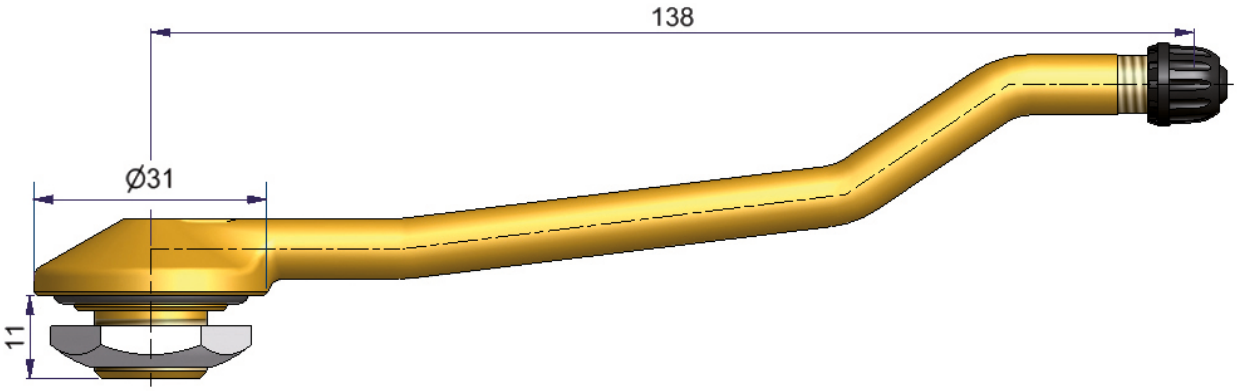

(V3.19.1)	Quantity per box
R-0911-2	10

GUIDING FLANGE VALVES - NICKEL-COATED

For industrial wheel with airtight ring.

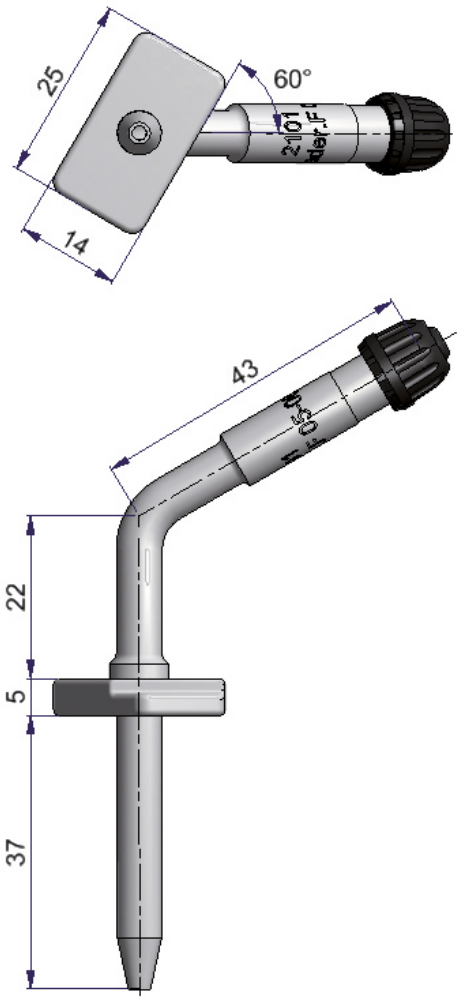

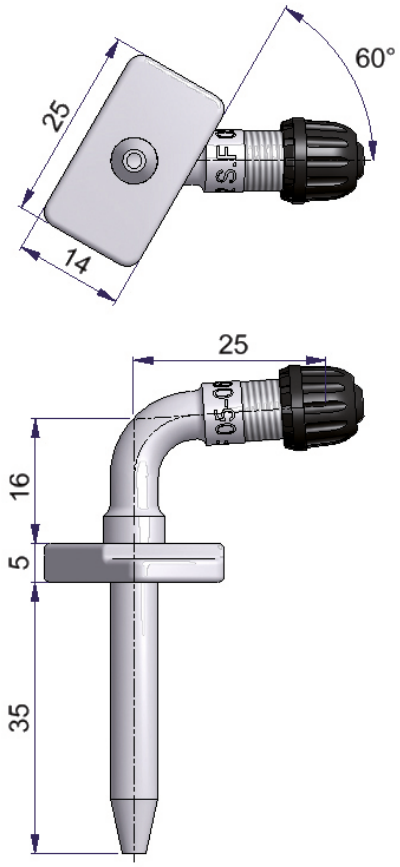

	Quantity per box
R-2101-2	10

	Quantity per box
R-2102-2	10

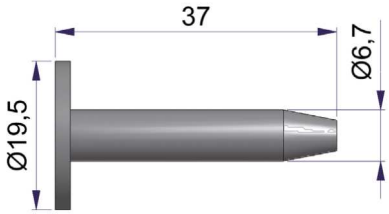

Plastic obturator	Quantity per box
41703-68	10

SCHRADER PACIFIC
Tire Hardware Solutions

VALVES FOR INNER TUBES

STRAIGHT AND SINGLE-BEND UNIVERSAL SCREW-ON VALVES

Valves come assembled with washer R-0569-3.
• Replace the sealing washer each time you dismount the tire.

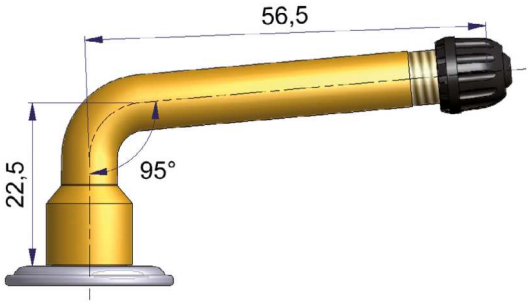

	Quantity per box
R-0750-2	10

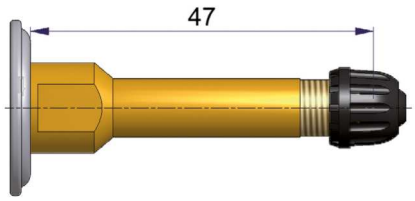

	Quantity per box
R-0572-2	10

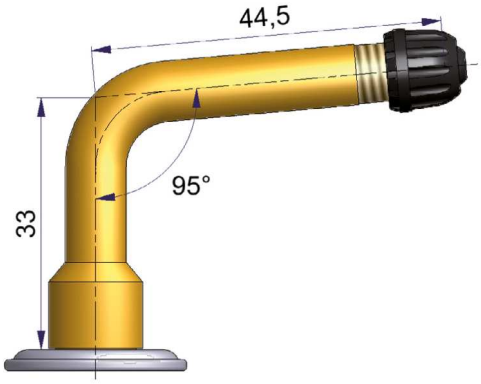

(V3.02.3)	Quantity per box
R-0576-2	10

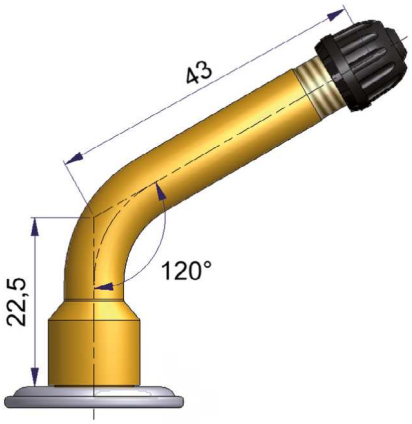

(V3.02.2)	Quantity per box
R-0570-2	10

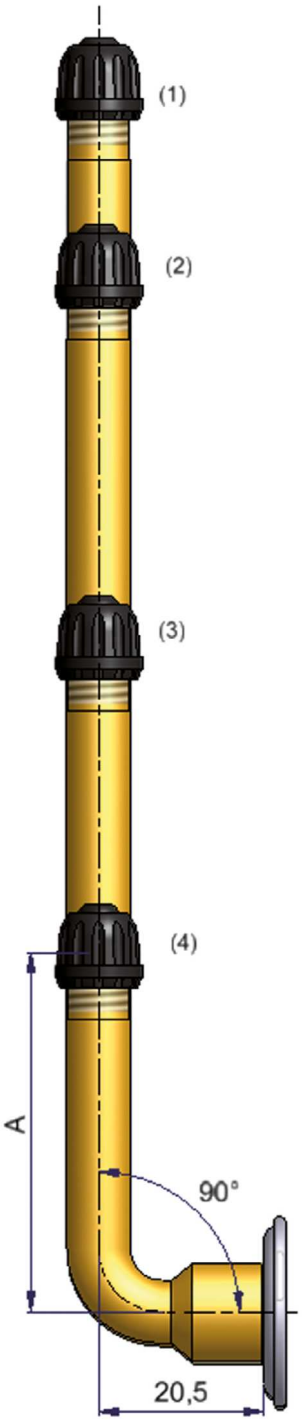

		ETRTO no.	A	Quantity per box
(1)	R-0752-2	(V3.02.17)	156.6	10
(2)	R-0751-2	(V3.02.13)	133.5	
(3)	R-1005-2		86	
(4)	R-1003-2	(V3.02.5)	47.5	

VALVES FOR INNER TUBES

STRAIGHT AND SINGLE-BEND UNIVERSAL SCREW-ON VALVES

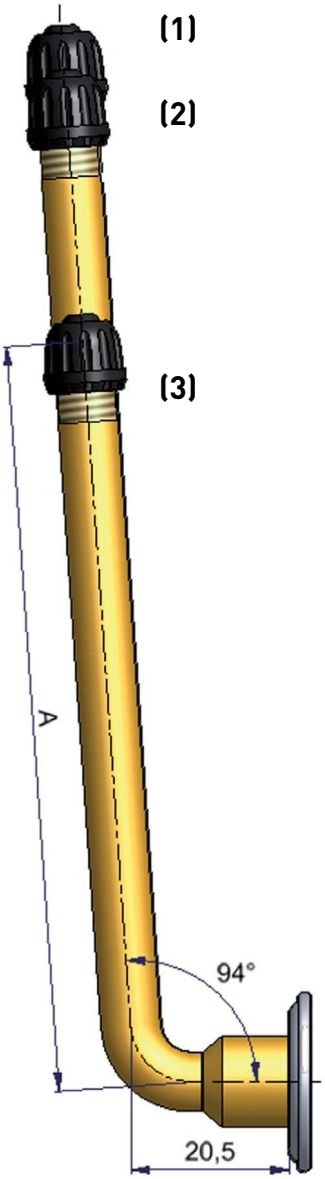

- Valves come assembled with washer R-0569-3.
- Replace the sealing washer each time you dismount the tire

		ETRTO no.	A	Quantity per box
(1)	**R-1158-2**	(V3.02.14)	138.5	10
(2)	**R-1157-2**	(V3.02.12)	132	
(3)	**R-1156-2**	(V3.02.9)	99.5	

CONNECTORS FOR UNIVERSAL STEMS

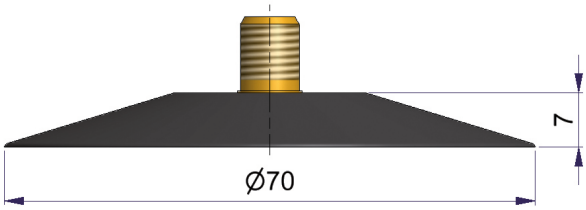

- The connectors used with hot vulcanization are provided machined.
- The connectors used with cold vulcanization are provided without machining, the base coated with bonding tape.
- Lip seal R-0569-3.

(V3.08.2)	Vulcanization	Quantity per box
S-4014-2	Hot	10

SCHRADER PACIFIC
Tire Hardware Solutions

VALVES FOR INNER TUBES

SPUDS FOR UNIVERSAL SCREW-ON VALVES

Change the sealing washer each time you remove the tire (R-0569-3).

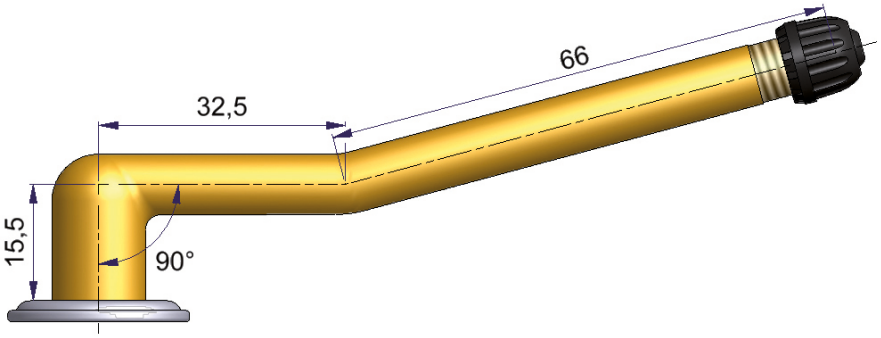

	Quantity per box
R-1221-2	10

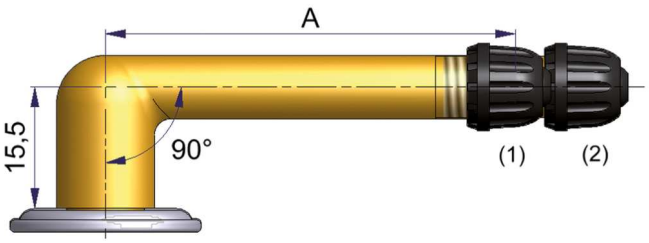

		A	Quantity per box
(1)	R-1081-2	51.5	10
(2)	R-1465-2	61.5	

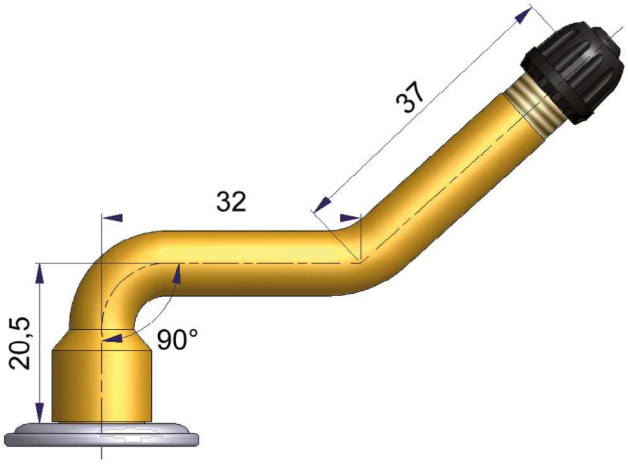

	Quantity per box
R-0578-2	10

VALVES FOR INNER TUBES

DOUBLE-BEND UNIVERSAL SCREW-ON VALVES

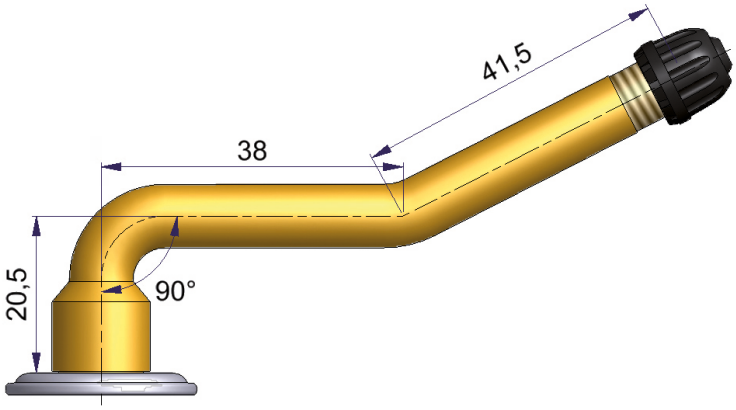

	Quantity per box
R-0579-2	10

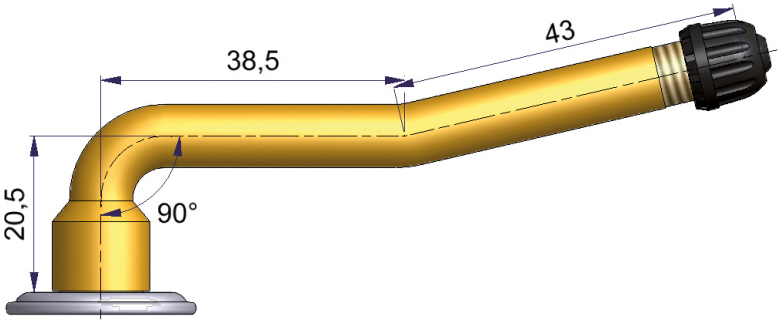

(V3.04.2)	Quantity per box
R-1198-2	10

LOW TRIPLE-BEND UNIVERSAL SCREW-ON VALVES

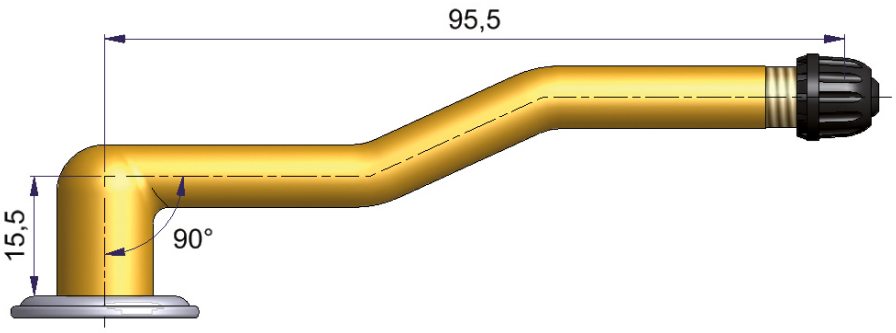

(V3.07.1)	Quantity per box
R-1007-2	10

VALVES FOR INNER TUBES

TRIPLE-BEND UNIVERSAL SCREW-ON VALVES

Change the sealing washer each time you remove the tire (R-0569-3).

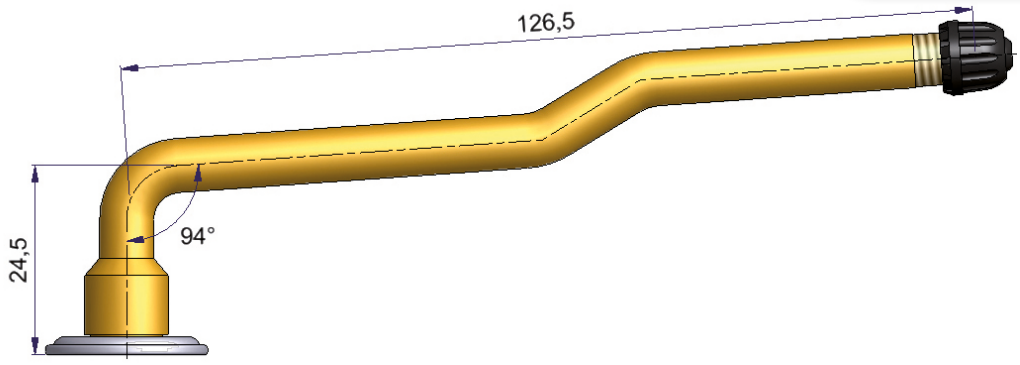

(V3.06.8)	Quantity per box
R-1123-2	10

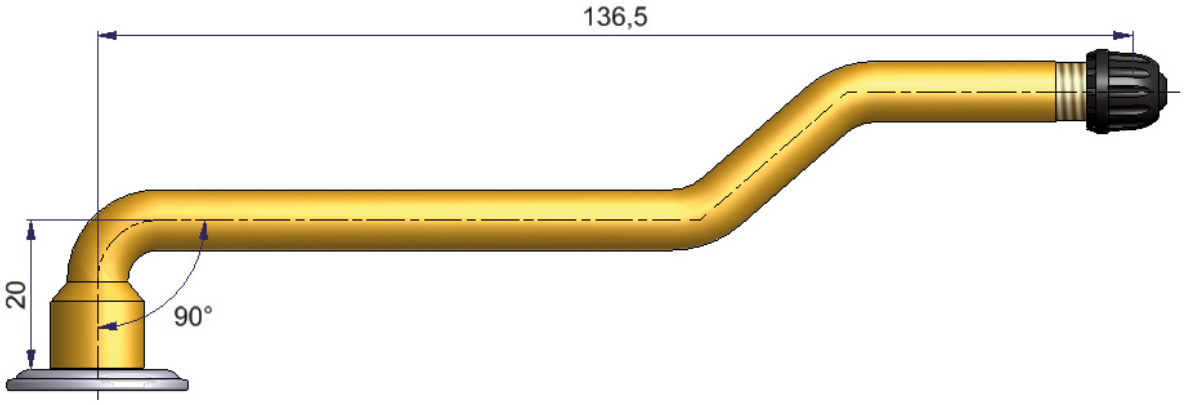

(V3.06.6)	Quantity per box
R-0819-2	10

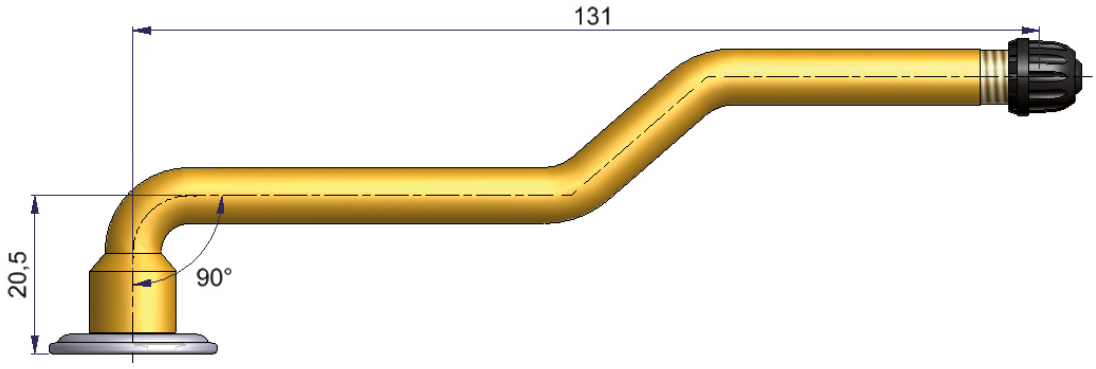

(V3.06.5)	Quantity per box
R-0582-2	10

TRIPLE-BEND UNIVERSAL SCREW-ON VALVES

Change the sealing washer each time you remove the tire (R-0569-3).

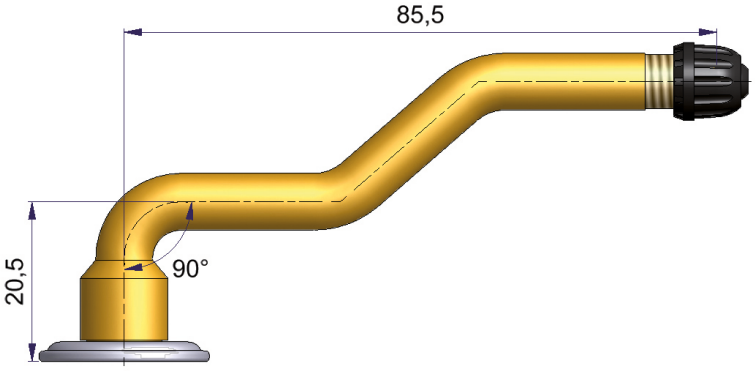

(V3.06.1)	Quantity per box
R-0922-2	10

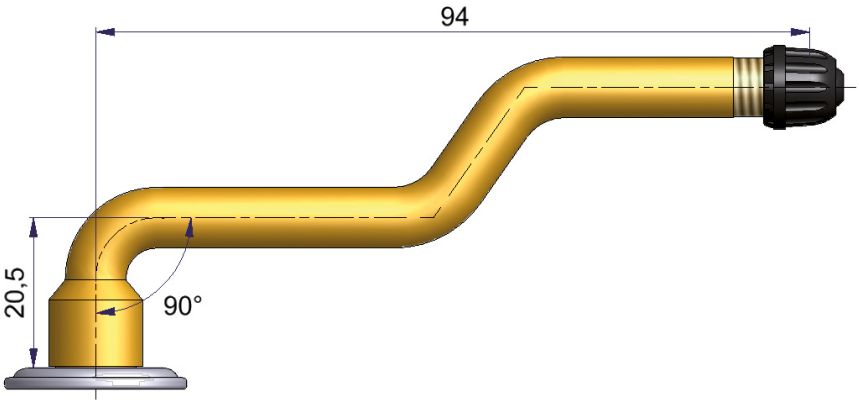

(V3.06.2)	Quantity per box
R-0580-2	10

FLEXIBLE EXTENSIONS AND LUGS

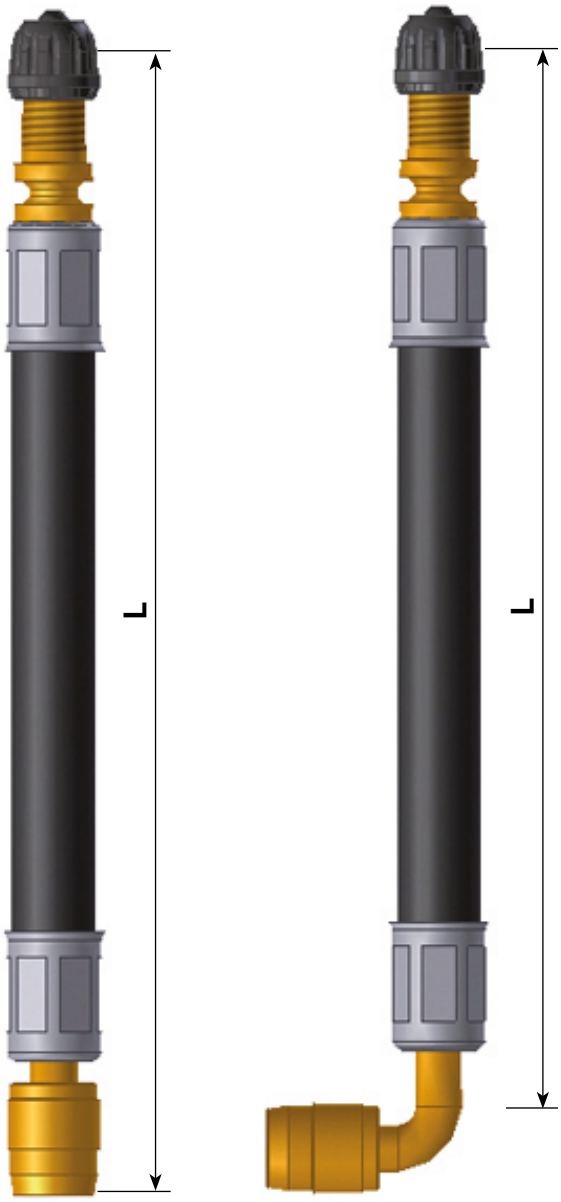

• Rotating nut tightness torque:
During the assembly of an extension, make sure that the space in the rim has no sharp edges that could damage the extension during usage.

STRAIGHT FLEXIBLE EXTENSIONS

10 pieces per bag	50 pieces per bag	W. (mm)
41315-68	41315-71	75
41316-68	41316-71	105
41317-68	41317-71	125
41318-68	41318-71	140
41319-68	41319-71	160
41320-68	41320-71	180
41321-68	41321-71	210
41322-68	41322-71	270
41323-68	41323-71	340
41324-68	41324-71	370
41325-68	41325-71	430
41326-68	41326-71	490
41327-68	41327-71	695

FLEXIBLE VALVE EXTENSION LOTS

	Contents of the lot	Lots per box
43770-68	2 X 41321 + 1 x R-1431	10

BENT FLEXIBLE EXTENSIONS

10 pieces per bag	W. (mm)
43771-68	140
42016-68	210
43772-68	290
41776-68	360
41777-68	460

MOUNTING LUGS FOR FLEXIBLE EXTENSIONS

		Pièces par boîte
(1)	R-1431-2	10
(2)	R-1144-2	10
(3)	S-4998-2	10

(1)

(2)

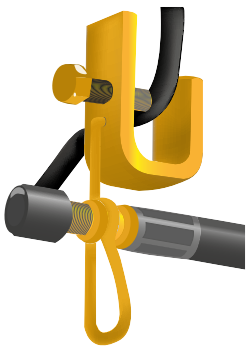

(3)

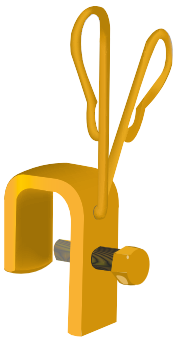

SCHRADER PACIFIC TIRE HARDWARE SOLUTIONS
RIGID PLASTIC 100% AIRTIGHT EXTENSIONS

LONG SKIRT

Valve mouth mounting torque :
0.4 to 0.7 N.m.
Hand tightening

SHORT SKIRT

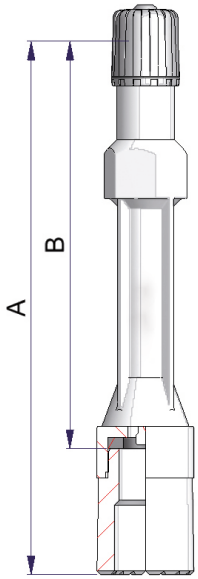

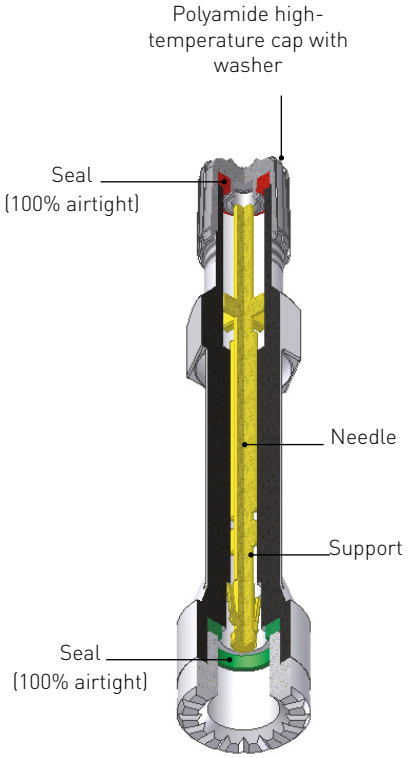

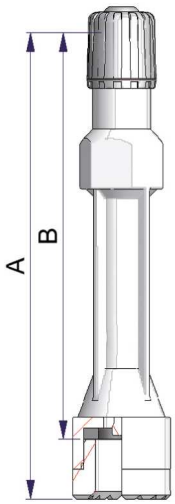

	Total length A (mm)	Useful length B (mm)	Quantity per box
42214-68	71	53.5	10
42214-69	71	53.5	100
42215-68	111	97.5	10
42215-69	111	97.5	100
42216-68	150	132.5	10
42216-69	150	132.5	100
42217-68	170	152.5	10
42217-69	170	152.5	100
42218-68	180	161	10
42218-69	180	161	100

	Total length A (mm)	Useful length B (mm)	Quantity per box
42563-68	61	53.5	10
43249-68	101	93.5	
42564-68	140	132.5	

BRASS EXTENSIONS

RIGID BENT EXTENSIONS

Rotating nut tightness torque : 0.3 to 0.5 N.m

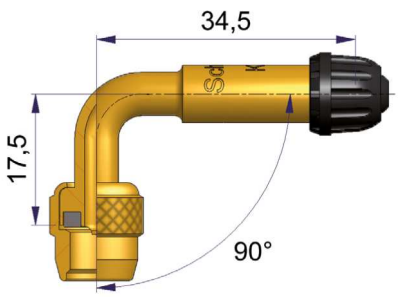

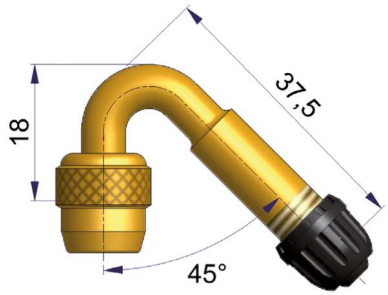

	Quantity per box
R-1197-2	10
R-1197-3	100

	Quantity per box
42253-68	10
42253-69	100

STRAIGHT RIGID NICKEL-COATED BRASS EXTENSIONS

Valve mouth mounting torque : 0.3 to 0.7 N.m.

(1) Short skirt

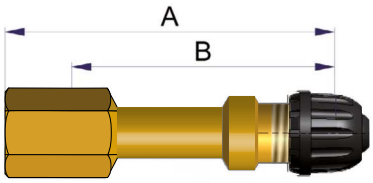

(2) Long skirt

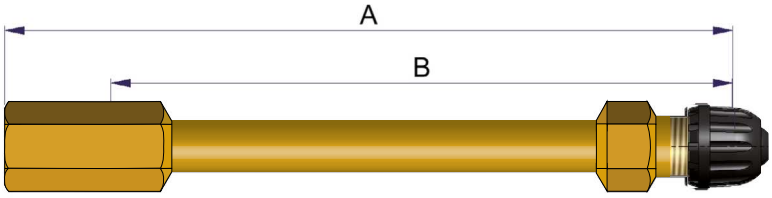

		Total length (A mm)	Useful length (B mm)	Quantity per box
(1)	S-4584-2	42. 5	34	10
(2)	S-4577-2	62.5	54	
(2)	S-4551-2	86.5	78	
(2)	S-4531-2	93.7	78	
(2)	S-4529-2	102.5	94	
(2)	S-4517-2	109.7	94	
(2)	S-4504-2	128.7	113	
(2)	S-4134-2	140.7	127	
(2)	R-3552-2	178	152	

WHEEL NUT INDICATORS

CHECKPOINT®

Wheels without hub cap

• Checkpoint products are biodegradable.

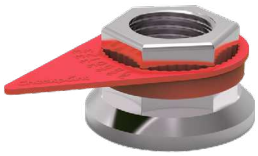

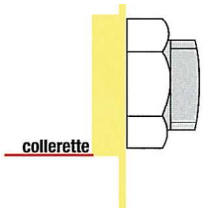

Position the **CHECKPOINT®** with the neck ring against the nut.

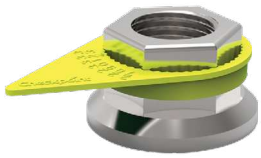

	Ø (mm)	Pieces per bag
61370-69	32	100
61369-69	33	

For other sizes of Checkpoint® red, contact us

	Ø (mm)	Pieces per bag
66732-69	19	100
61224-69	22	
66733-69	23	
61225-69	24	
65910-69	27	
65911-69	30	
65912-69	32	
65913-69	33	
66542-69	41	

DUSTITE® LR

Wheels with hub cap

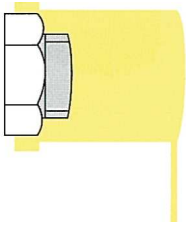

Push the **DUSTITE®** LR down to the bottom of the nut. Use the arrows as grips to remove them.

	Ø (mm)	Pieces per bag
61368-71	32	50
61367-71	33	

DUSTITE ® LR is both a dust cap and a loose wheel nut indicator used on hub caps with bolt access.

For other sizes of Dustite® red, contact us

	Ø (mm)	Pieces per bag
61222-71	24	50
61279-71	27	
61223-71	30	
65914-71	32	
65915-71	33	

	Description
61390-67	DUSTITE Removal Tool

SCHRADER PACIFIC Tire Hardware Solutions

WHEEL NUT RETAINER

CHECKLOCK® SQ

Stainless steel nut retainer with centre-to-centre distance of 335 mm

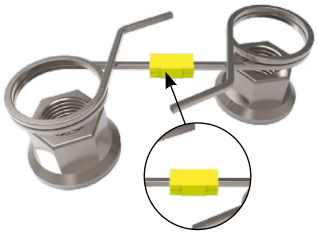

Overheating indicators

	Ø (mm)	Spacing (mm)	Number of nuts	Pieces per bag
61603-68	24	205	6	10
61604-68	27	205	6	
61605-68	27	245	6	
61606-68	27	275	8	
61607-68	30	335	10	
61608-68	30	275	8	
66734-68	32	335	10	
66735-68	33	335	10	

SAFE WHEEL™

Nut retainer ring with centre-to-centre distance of 335 mm

	Description	Pieces per bag
66938-67	Grey ring 32/33 mm for 10 nuts (nuts not included)	1

CHECKLINK®

Loose wheel nut indicator with retention eyelets.

	Ø (mm)	Pieces per bag
66021-71	30	50
66022-71	32	
66023-71	33	
61600-71	30	
61601-71	32	
61602-71	33	

- The size in millimetres corresponds to the size of the nut, from flat end to flat end. The sizes of the indicators are always individually marked on the products.
- High-resistance polypropylene products.
- Indication of wheel overheating (melts at over 120°C).

CHECKTHREAD®

Stud tester

	61490-67
Designation	A set of stainless steel stud testers to check the quality and integrity of the wheel studs.
Quantity	1

BORE DIAMETER GAUGE:

The bore of a "large-bore" valves is **3 times** greater than the "standard bore".
The bore of a "super large bore" valves is **12 times** greater than the "standard bore".

Large bore [LB]: 5mm (0.19")

Super large bore [SLB]: 11mm (0.44")

FARM VEHICLES AND EARTHMOVER VALVES

- Hydro-flotation connectors and ballasting pump 39
- Hydro-flotation valves for inner tubes 40
- Hydro-flotation valves for American type tubeless (LB) 41
- Tubeless or euro inner tube valves (LB) 43
- Valves and spuds for American type tubeless (LB) 45
- Extensions and clamping lugs (LB) 48
- Valves and extensions for Caterpillar® equipment 50
- Tubeless valves, spuds and extensions (SLB) 52

HYDRO-FLOTATION CONNECTORS AND BALLASTING PUMP

• Operating pressure : 7 bar.
• Supply with filtered and lubricated air. (see page 80)

	Description	Pieces per box
67115-67	Ballasting pump Dimensions: 40 x 40 x 50 cm Weight: 19 kg	1

- For water ballasting (or other antifreeze products) of tractor and earthmover tires.
- Pneumatic diaphragm pump. Flow 140 L/min.
- Delivered complete with pressure gauge, air regulator and lubricator.
- Suction hoses L = 4 m and filling hoses L = 3m, connections on hydro-flotation valve.

HYDRO-FLOTATION CONNECTORS AND BALLASTING PUMP

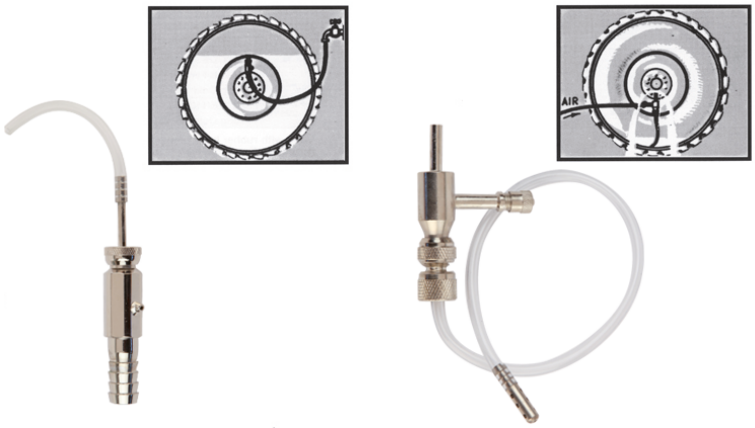

	65021-67	65022-67
Designation	Connector for 80% water ballasting	Agricultural drainage tool
Quantity per box	1	1

	37-099	67120-67	65922-67	66779-67
Designation	Complete ballasting connector 1/2"	Repair kit for hydro-flotation connector 37-099	Spare nipple for hydro-flotation connector 37-099 (teflon washer included)	Quick coupler for water ballasting
Quantity per box	1	1	1	1

TUBE DEFLATOR

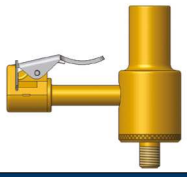

	R-0634-1
Description	Releases the air from inner tubes
Use	

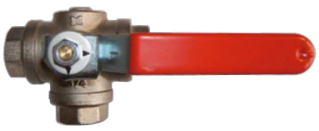

	Description	Quantity per box
67152-67	3-way valve for pump 67115-67	1

HYDRO-FLOTATION VALVES FOR INNER TUBES

Hot cure :
• Use hot solution and hot binding rubber
Cold cure :
• Use cold self-vulcanizing binding rubber and cold solution
(see pages "Hot binding rubber", page 126)

Grease the coupler washer before mounting.

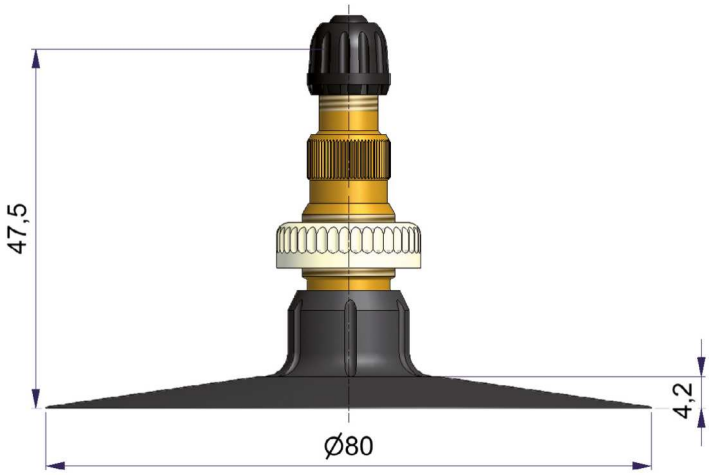

TR 218 A (V4.03.1)	S-4046-2	S-4046-R	S-4047-2
Vulcanization	hot		cold
Base finish	machined, without bonding tape		machined
Pieces per bag	10	1	10

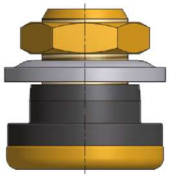

	R-1225-2	R-1225-3	S-4385-1	R-1139-2
	(V9.14.1)			(V4.02.1)
Designation	Polyamide rim nut		Cap for farm valve hole	Hydro-flotation nipple
Quantity per box	10	100	1	10
O-ring seal	-	-	-	S-4013-2

SCHRADER PACIFIC Tire Hardware Solutions

HYDRO-FLOTATION VALVES FOR INNER TUBES

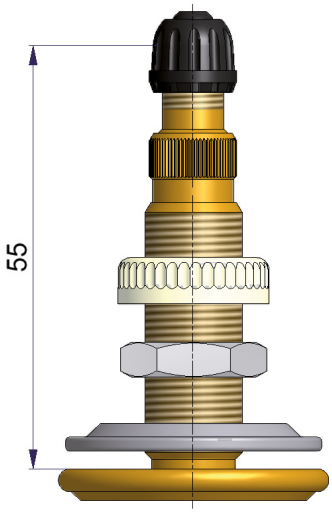

Rim nut torque :
13 to 15 N.m.

	Designation	Quantity per box
S-4011-2	Metal for repair	10

HYDRO-FLOTATION VALVES FOR AMERICAN TYPE TUBELESS (LB)

16

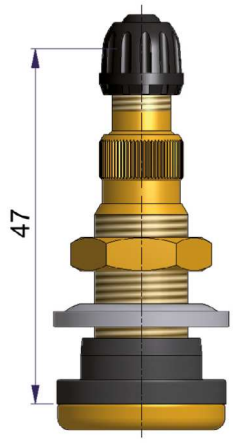

TR 618A (V5.15.1)	Quantity per box
61531-68	10
61531-69	100

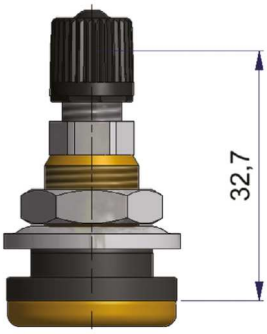

TR618A short	Quantity per box
66852-68	10

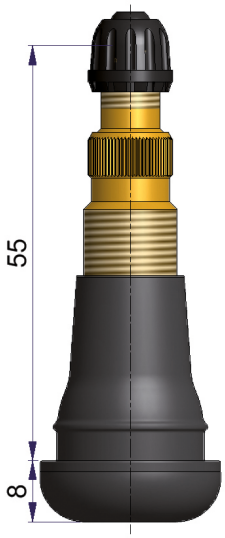

	Designation	Quantity per box
42176-68	Hydro-flotation valve with rubber	10

HYDRO-FLOTATION VALVES FOR AMERICAN TYPE TUBELESS (LB)

• Nut torque: 5 to 6.1 N.m.
• Grease the coupler washer before mounting.
(Nut R-0884-2, washer S-4033-2, rubber grommet S-4031-2)

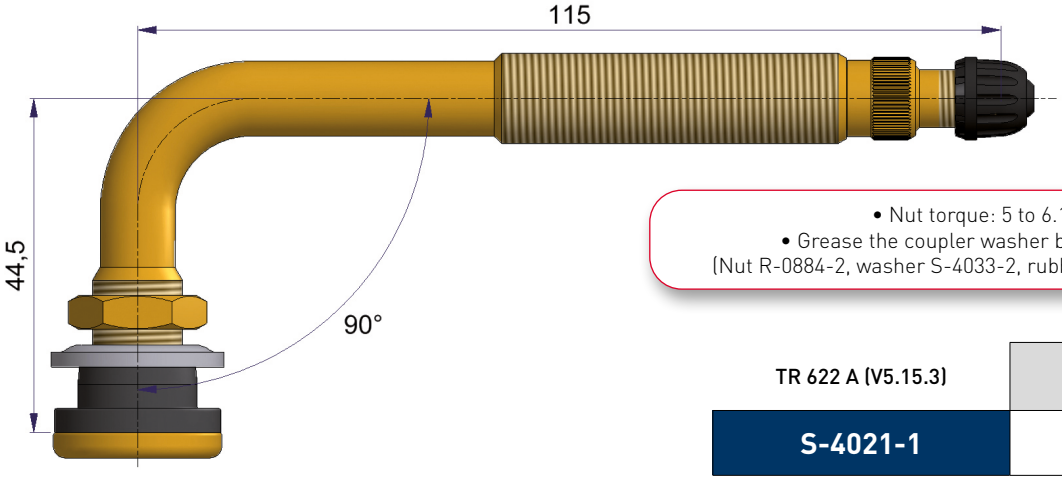

• Nut torque: 5 to 6.1 N.m.
• Grease the coupler washer before mounting.
(Nut R-0884-2, washer S-4033-2, rubber grommet S-4031-2)

TR 622 A (V5.15.3)	Quantity per box
S-4021-1	1

SCHRADER PACIFIC
Tire Hardware Solutions

TUBELESS OR EURO INNER TUBE VALVES (LB)

Grease the coupler washer before mounting. (O-ring S-4012-2)

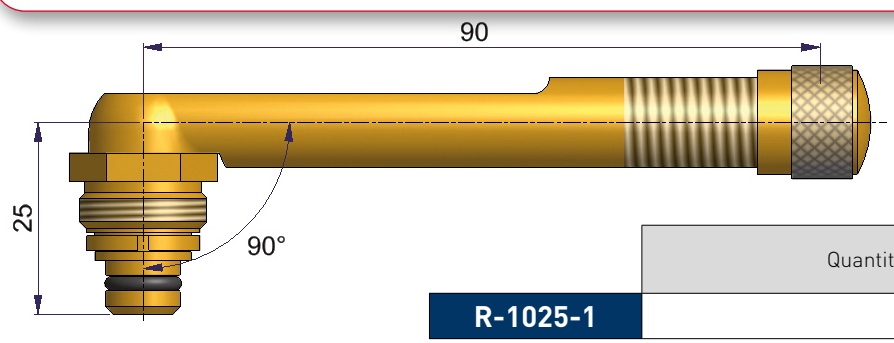

	Quantity per box
R-1025-1	1

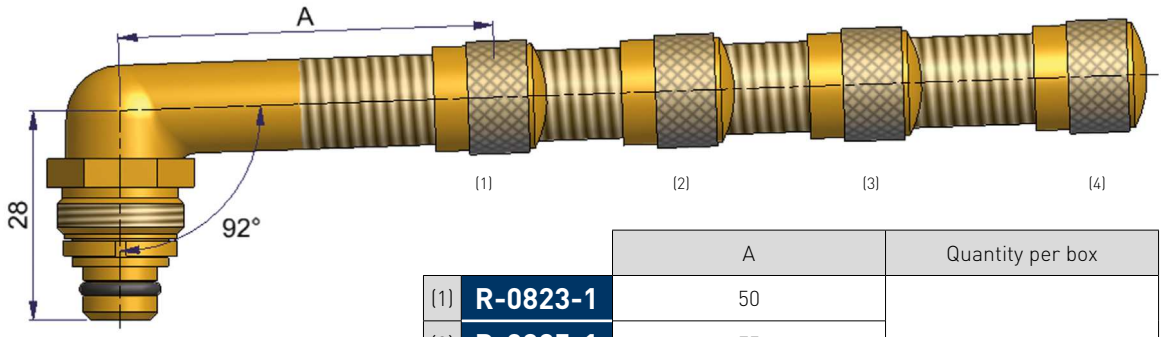

		A	Quantity per box
(1)	R-0823-1	50	1
(2)	R-0825-1	75	
(3)	R-0826-1	100	
(4)	R-0827-1	130	

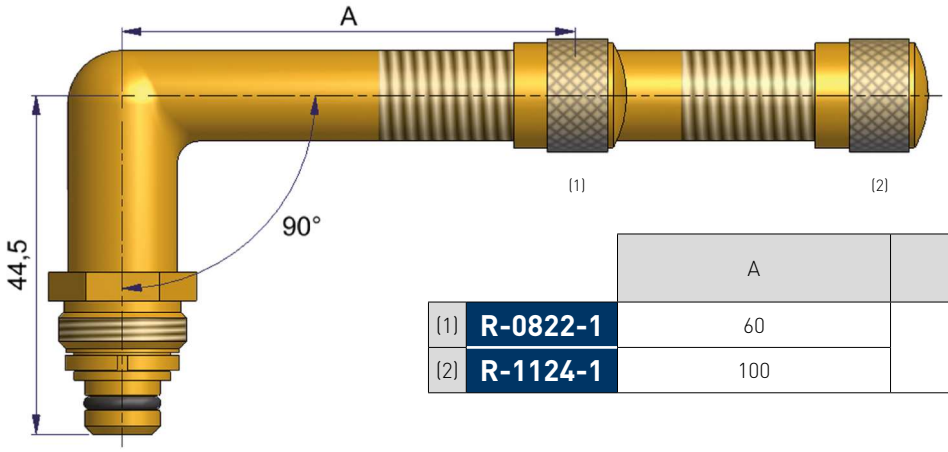

		A	Quantity per box
(1)	R-0822-1	60	1
(2)	R-1124-1	100	

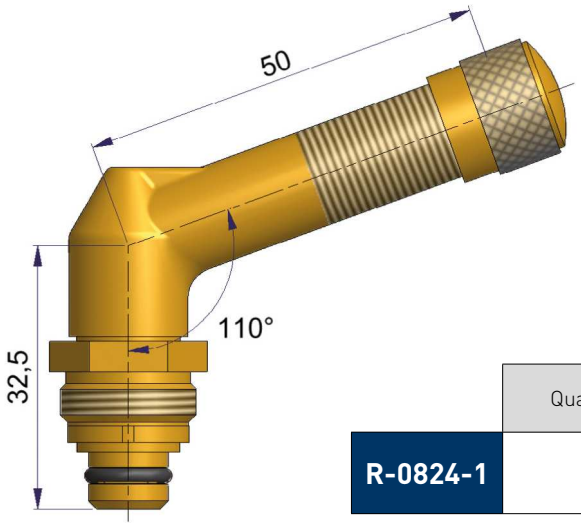

	Quantity per box
R-0824-1	1

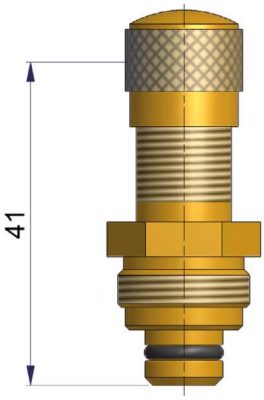

(V5.03.1)	Designation	Quantity per box
R-1009-1	For valves placed 100 mm from hook	1

TUBELESS OR EURO INNER TUBE VALVES (LB)

SWIVEL VALVES

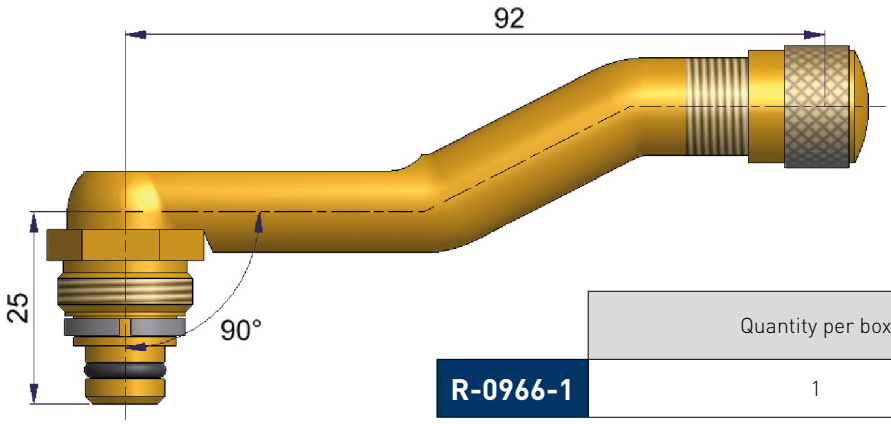

	Quantity per box
R-0966-1	1

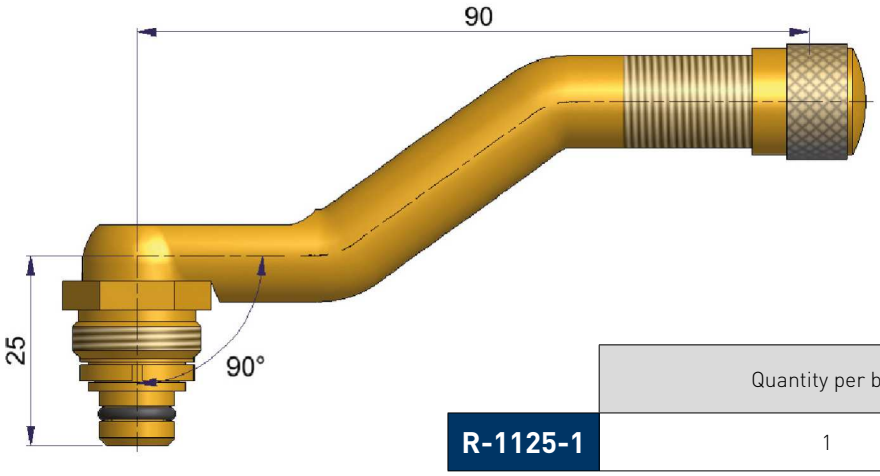

	Quantity per box
R-1125-1	1

Grease the coupler washer before mounting. (O-ring S-4012-2)

TUBELESS 20.5

Metal spud for swivel valve

Nut tightening torque 19 to 22 N.m. (O-ring seal R-1420-2)

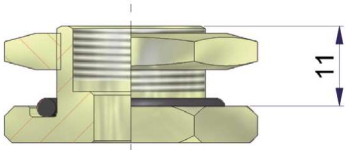

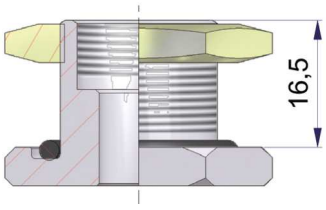

	R-0965-1	R-0829-1
Designation	Metal spud for countersunk rim hole	Metal spud for non-countersunk rim hole
Quantity per box	1	1

SCHRADER PACIFIC Tire Hardware Solutions

VALVES FOR AMERICAN TYPE TUBELESS (LB)

FOR SPUD 20.5

- Valve mounting torque : 7.7 to 8.8 N.m.
- Grease the coupler washer before mounting.
- These valves are used with spud R-1842-1. (O-ring S-4012-2)

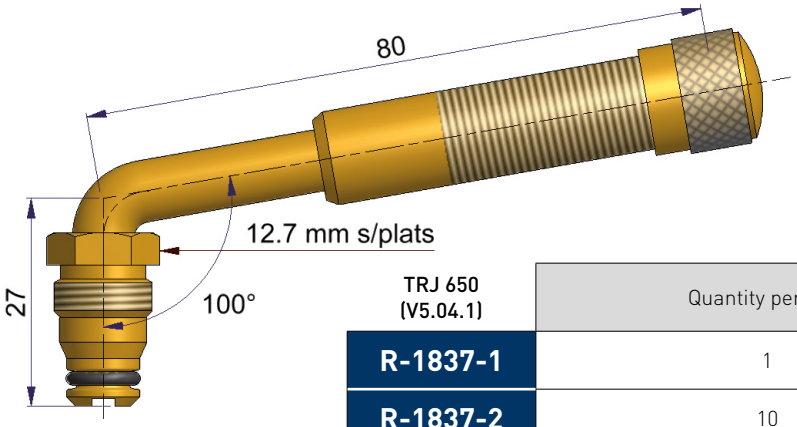

TRJ 650 (V5.04.1)	Quantity per box
R-1837-1	1
R-1837-2	10
R-1837-3	100

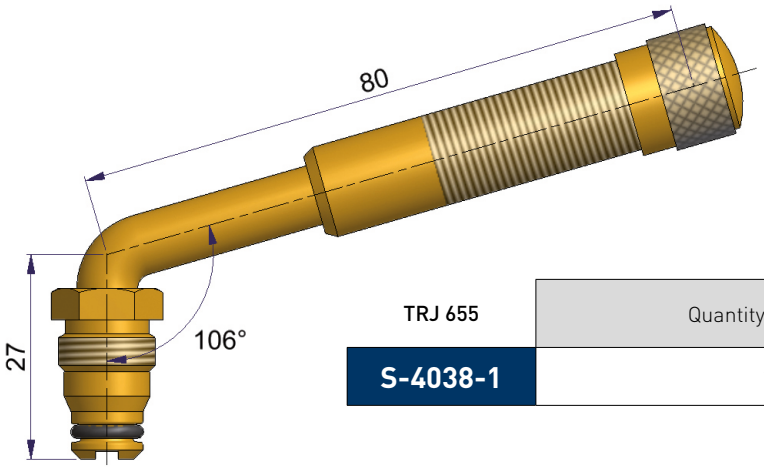

TRJ 655	Quantity per box
S-4038-1	1

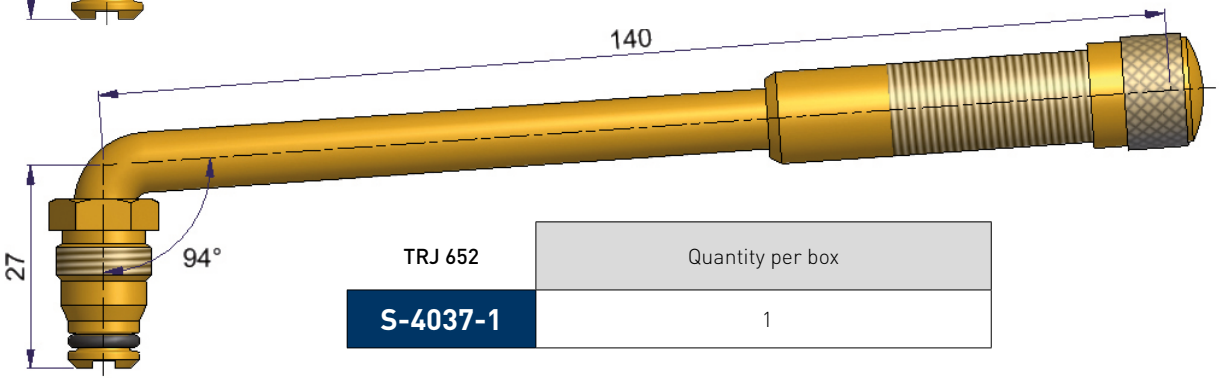

TRJ 652	Quantity per box
S-4037-1	1

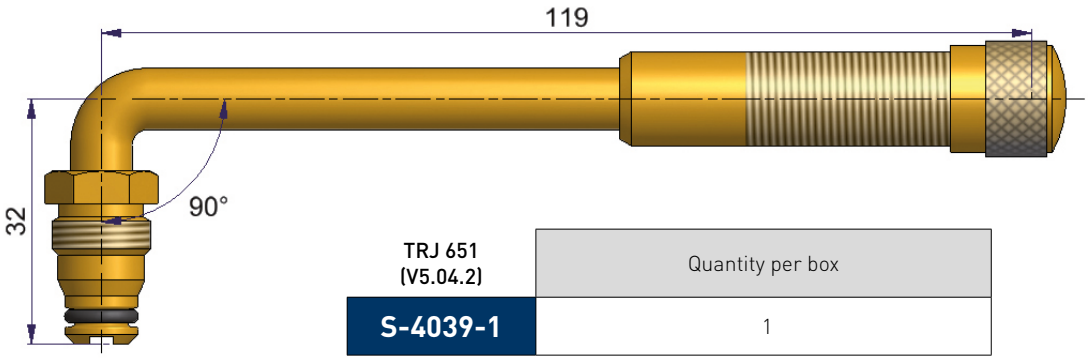

TRJ 651 (V5.04.2)	Quantity per box
S-4039-1	1

VALVES FOR AMERICAN TYPE TUBELESS (LB)

FOR SPUD

20.5

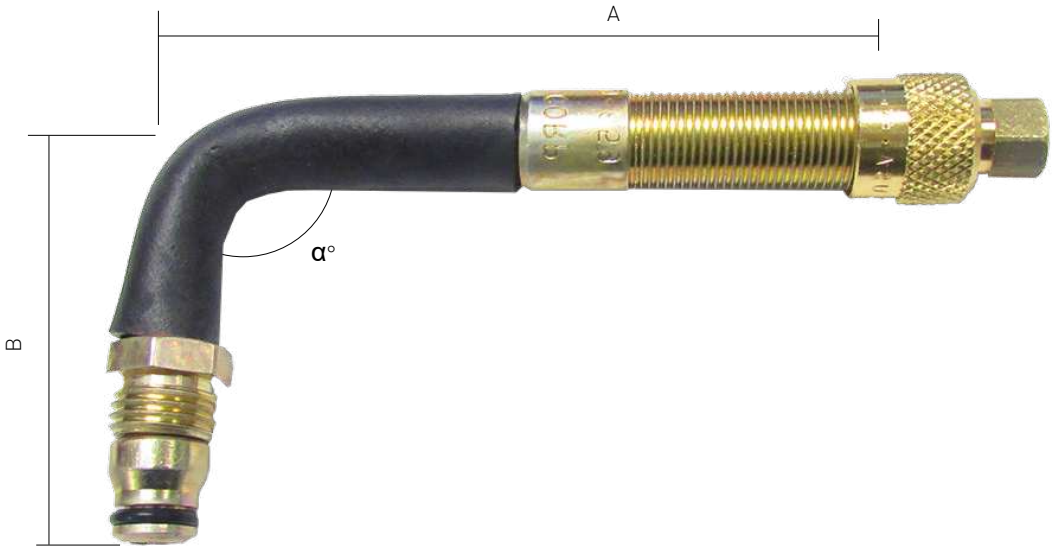

	61302-67	61303-67	61316-67	61317-67	61318-67
Code	**WH-58-2-45C (*)**	**WH-50-J-659**	**WH-300-J-653**	**WH-45-5**	**WH-54-6**
TR no.	-	J-659	J-653	J-4000-5	-
α°	45	90	80	80	90
Dimensions A (mm/ ") B (mm/ ")	50.8 / 2 .482-26 27.4 / 1.08 1/2-20	88.9 / 3 1/2 50.4 / 1 57/64	63.5 / 2 1/2 27.4 / 2 5/64	127 / 5 27.4 / 1 5/64	152.4 / 6 60.8 / 2 25/64
Quantity per box	1	1	1	1	1
Type of gear	**Caterpillar 773**	**Caterpillar 777B/C**	**-**	**-**	**-**

(*) Valve sold complete with connector, core and cap

MONOBLOCK

20.5

Nut mounting torque : 19 to 22 N.m.

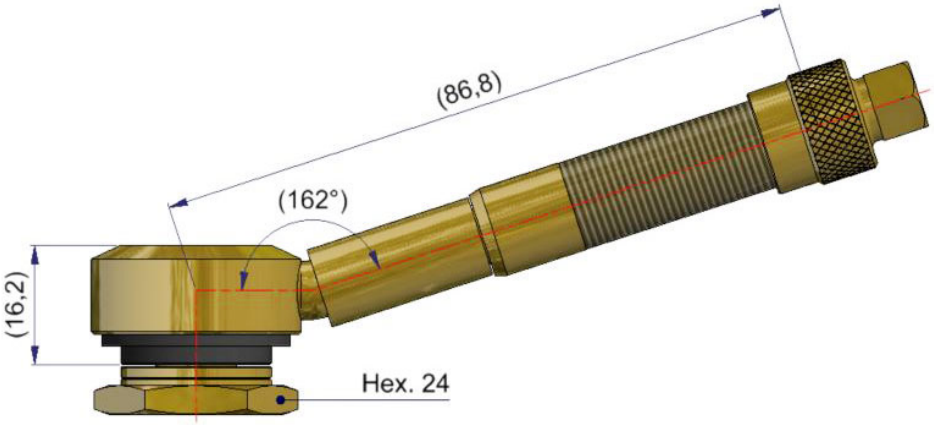

	S-4022-1
	TRJ 691 (V5.09.1)
Quantity per box	1

SCHRADER PACIFIC
Tire Hardware Solutions

VALVES FOR AMERICAN TYPE TUBELESS (LB)

FOR SPUD

20.5

Nut mounting torque :
19 to 22 N.m.

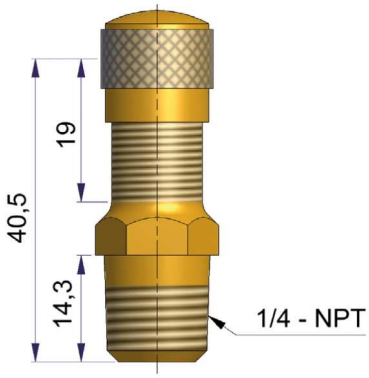

	S-4030-1
	TRJ 671
	Assembly without connector
Quantity per box	1

Nut mounting torque:
7.7 to 8.8 N.m.

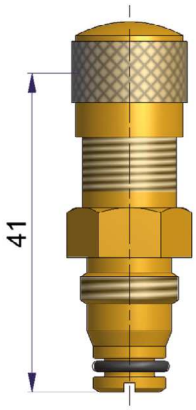

	R-0979-1
	(V5.03.1) TRJ 670
Code	H-42
Spare washer	S-4012-2
Quantity per box	1

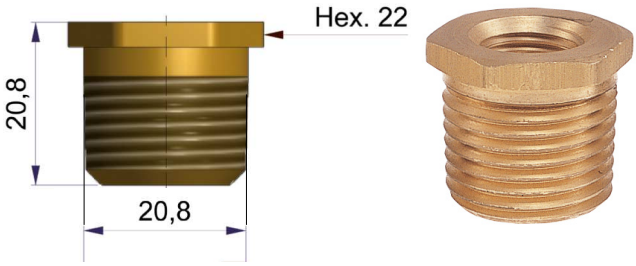

	66780-67
	TR-SP3
Code	C-10
Designation	Screwable spud 1/2'' NPT Replacement without dismounting the tire
Quantity per box	1

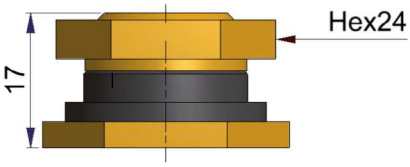

	R-1842-1	R-1842-2
Code	H-41²	
Spare washer	TR RG 22 R-1642-2	
Quantity per box	1	10

EXTENSIONS (LB)

FLEXIBLE EXTENSIONS

- Equipped with 2 locking nuts and a sealing nut to screw onto the valve.
- Delivered without cap or core (to be recovered from the valve).

	Code	Useful W. (mm)	Pieces per bag
66757-67	810F-5	140	1
66758-67	810F-6	162	
66759-67	810F-7	178	
66760-67	810F-8	210	
66761-67	810F-12	305	
66762-67	810F-13	343	
66763-67	810F-16	406	
66764-67	810F-18	470	
66765-67	810F-21	546	
66766-67	810F-23	597	
66767-67	810F-25	635	
66768-67	810F-29	749	
66769-67	810F-32	813	
61314-67	810F-40	1016	

FOLDABLE EXTENSIONS

- Equipped with 2 locking nuts and a sealing nut to screw onto the valve.
- Delivered without cap or core (to be recovered from the valve).

	Code	Useful W. (mm)	Pieces per bag
66747-67	753S-4	102	1
66748-67	753S-8	203	
66749-67	753S-10	254	
66750-67	753S-12	305	
66751-67	753S-16	406	
66752-67	753S-18	457	
66753-67	753S-20	521	
66754-67	753S-24	622	
66755-67	753S-29	749	
66756-67	753S-32	813	

RIGID BRASS EXTENSIONS

(1) Equipped with hexagonal cap.
(2) Equipped with hexagonal cap and 2 nuts.

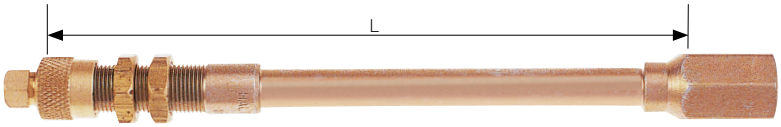

		Code	Useful W. (mm)	Pieces per bag
(1)	66770-67	867-2	51	1
(1)	66771-67	867-3	76	
(1)	66772-67	867-4	102	
(1)	66773-67	867-5	127	
(2)	66774-67	867-6	153	
(2)	66775-67	867-8	203	
(2)	66776-67	867-9	229	
(2)	66777-67	867-10	254	
(2)	66778-67	867-13	330	

SCHRADER PACIFIC
Tire Hardware Solutions

VALVES AND EXTENSIONS FOR CATERPILLAR® EQUIPMENT (LB)

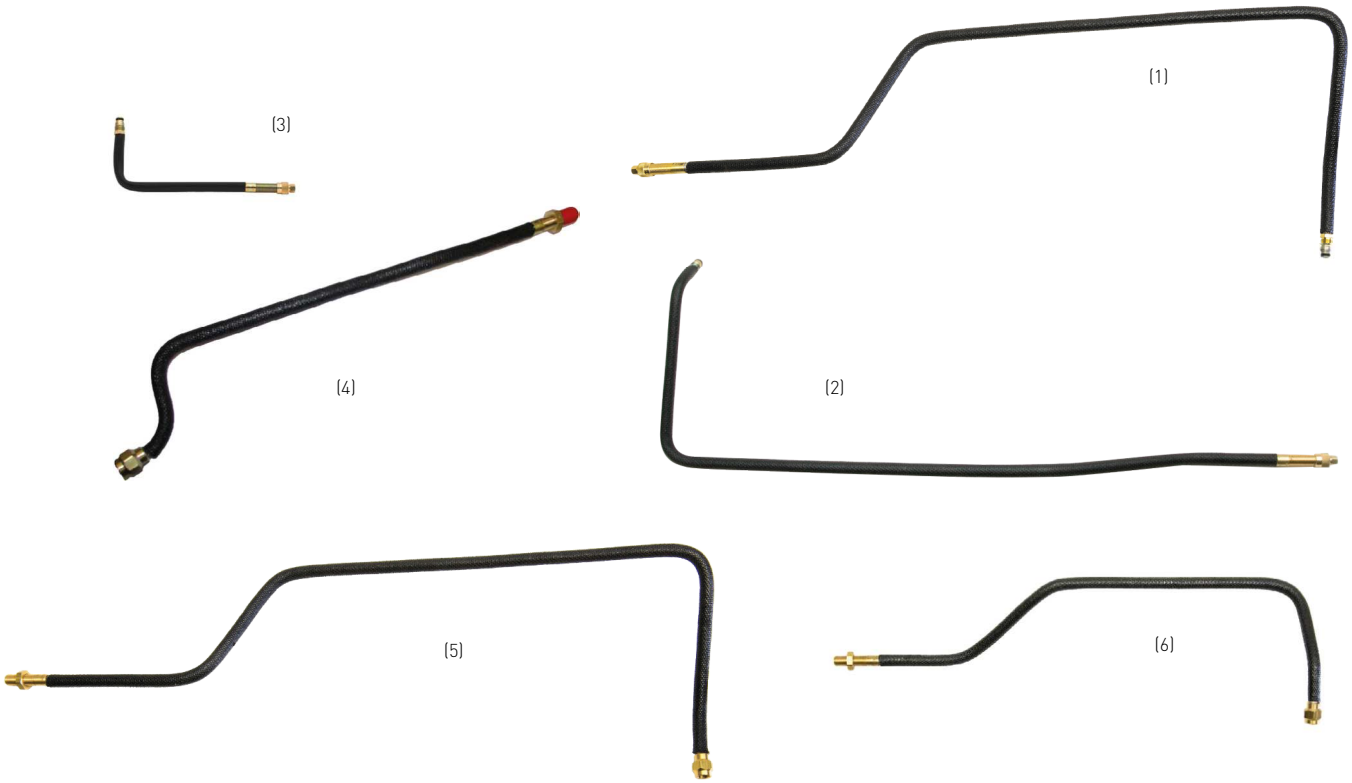

VALVES

	61306-67	61304-67	61305-67
	(1)	(2)	(3)
Code	**WHG-5112VC**	**WHG-8018VC**	**WHG-8019VC**
Designation	Quadruple-bend valve	Quadruple-bend valve	Single-bend valve
Dimensions W. (mm)	721	679	203
Dimensions Length: (")	28 3/8	26 3/4	8
Quantity per box	1	1	1
Type of gear	**Caterpillar 777 D**	**Caterpillar 777 B/C**	**Caterpillar 777 B/C** **Caterpillar 777 D** **Caterpillar 777 F**

MULTI-BEND RIGID EXTENSIONS

	61301-67	61307-67	61311-67
	(4)	(5)	(6)
Code	**WHD-0585EC**	**WHD-7949EC**	**WHD-7948EC**
Designation	Quadruple-bend extension	Quadruple-bend extension	Quadruple-bend extension
Dimensions W. (mm)	456	733	524
Dimensions Length: (")	17 15/16	28 7/8	20 5/8
Quantity per box	1	1	1
Type of gear	**Caterpillar 773**	**Caterpillar 775 G** **Caterpillar 777 F**	**Caterpillar 775 G**

VALVES FOR AMERICAN TYPE TUBELESS (SLB)

20.5

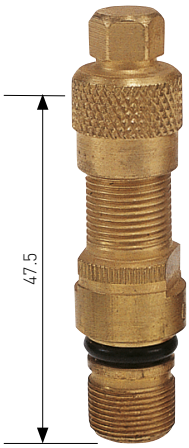

	66786-67	61310-67	61309-67	66097-67
Code	R-525	R-660	R-675	R-520 // TR-CH-8
Designation	Directionable 90° elbow	Directionable 60° elbow	Directionable 75° elbow	-
Quantity per box	1	1	1	1
Type of gear	-	Caterpillar 785 D Caterpillar 789 D Caterpillar 793/793 F	-	-

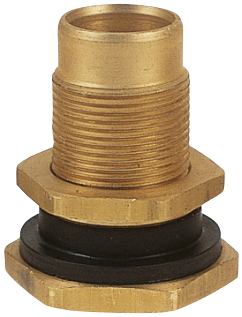

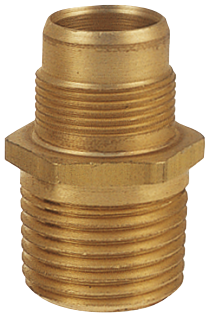

	66793-67	66794-67	66781-67	66782-67
Code	T-81	T-82	C-100	C-155
Designation	TR-SP8 Spud	TR-SP8 Long spud	Spud with screwable valve 1/2" NPT	Spud without screwable valve 1/2"NPT
Use			with 66097-67, 66786-67, 61310-67 and 61309-67	with 66786-67, 61310-67 and 61309-67
Quantity per box	1	1	1	1

INFLATION/BALLASTING CONNECTOR

- During inflation, the air pressure in the tire can be checked by connecting an inflating gauge onto the system.
- Reduces inflating time by 60% and deflating time by 80%.
- Can be used to ballast tires with a liquid on SLB valves.

TR-AD-8	Code	Designation	Quantity per box
66783-67	IN-80A	Complete inflation/ballasting connector TR-AD-8 for connection onto air chuck 1/2"	1

SCHRADER PACIFIC
Tire Hardware Solutions

VALVES FOR AMERICAN TYPE TUBELESS (SLB)

EXAMPLE OF COMPLETE MOUNTING

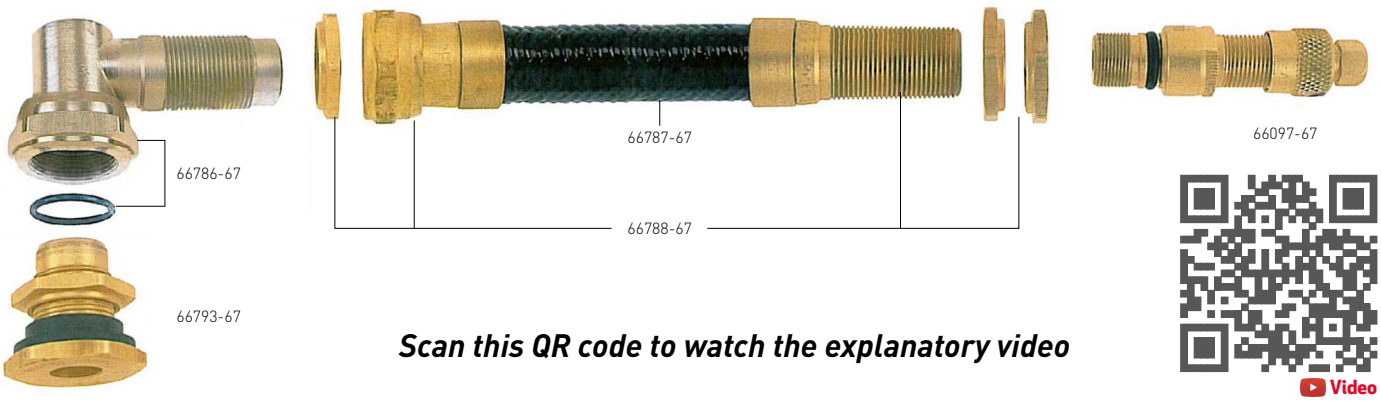

Scan this QR code to watch the explanatory video

Rallonges Gros Débit
Video

ASSEMBLY KIT FOR ON-SITE REPAIR

	Code	Case contents	Quantity per box
66788-67	R-969K	1 complete valve mounted with core and cap (1) 1 rotating coupler (2) 1 extender (3) 2 rings (4) 2 nuts (5)	1

	Code	Designation	Quantity per box
66787-67	R-760	Hose coil 15 m 1/2'' for kit 66788-67	1

	Code	Designation	Quantity per box
66791-67	S-7910	Clamping lug for SLB extension	1

CRIMPING KIT

	Code	Designation	Quantity per box
61308-67	T-620	Complete manual crimping kit (set with stabilising bar + threaded stem and screw + nut)	1

TUBELESS VALVES FOR CATERPILLAR® EQUIPMENT (SLB)

20.5

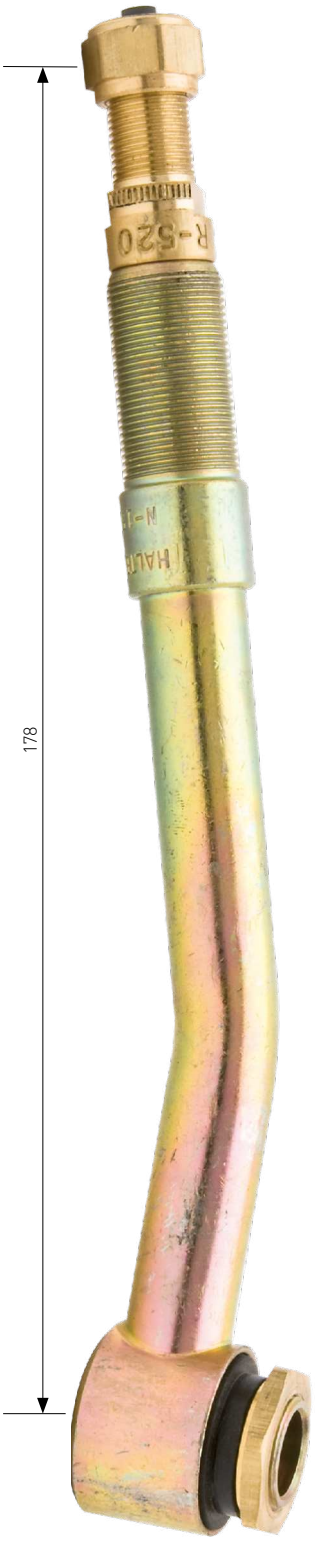

	66098-67	66099-67
Code	N-1538B	N-1543A
Valve angle	15°	15°
Pieces per box	1	1

SCHRADER PACIFIC
Tire Hardware Solutions

Chapter 4

Maintaining the correct tire pressure is the best way to ensure passenger safety and extend tire life.
Cores and caps compliant with ETRTO, ISO,... and other international standards can guarantee the right pressure level.

The cores and caps sold in the aftermarket are all OE products, the same ones are factory-installed, and are approved by both car and tire manufacturers.
The core and sealing cap work together to effectively seal the valve.

CORES:
- The VALVE CORE is designed to keep the air inside the tire or in the air-conditioning circuits
- Replace it each time you change your tire
- When inflating your tire, use a coupler in good condition and clean air
- Adhere to the recommended tightening torques
- To install the core at the correct torque, use tool 66690-67

The cores listed in this catalogue are only for use on automobiles.

CAPS:
The SEALING CAP is the only cap that guarantees that the valve is airtight
- The cap protects the entire inside of the valve (inlet, core) by preventing foreign matter getting into the functional part of the valve core and by preventing plunger leakage

VALVE CORES AND CAPS

- Valve cores 56
- Valve caps. 56
- Valve cores for air conditioning R134A and 1234yf 58
- Caps for air conditioning R134A and 1234yf 58
- Boxes for air conditioning R134A and 1234yf 59

CORES

STANDARD FLOW

	37992-69	37992-80	43078-69
Body material	Nickel-plated brass		Nickel-plated brass
Seal	Teflon		Teflon
Tightness torque (N.m)	0,23 to 0,56		0,23 to 0,56
Operating pressure (bar)	0 to 14		0 to 14
Use			Core specially recommended for bead-balanced wheels
Quantity per box	100	1000	100

	T66690	T66690-10
Description	Tool for tightening cores with tightening torque pre-set to 0.40 N.m.	
Quantity per box	1	10

LARGE BORE

	43457-68	R-0765-2	S-4587-2	R-0821-2
Body material	Tinned	Enamelled brass	Nickel-plated brass	Brass
Seal	Fluorocarbone	Nitryl	Teflon	Silicon
Tightness torque (N.m)	0,8 to 1,8	0,7 to 1,1	0,4 to 0,7	0,8 to 1,1
Operating pressure (bar)	0 to 35	0 to 14	0 to 20	0 to 14
Use				Clapet for spud in Brass
Quantity per box	10	10	10	10

CAPS

VALVE CAPS

	S-4000-3	S-4000-5	30307-63	30307-53	30307-54	30307-57
Body material	Polyethylene		Polyethylene		Polyethylene	Polyethylene
Colour	black		vert		blue	yellow
Tightness torque (N.m)	0.2 to 0.3		0.2 to 0.3		0.2 to 0.3	0.2 to 0.3
Quantity per box	100	1000	100	1000	100	1000

SCHRADER PACIFIC
Tire Hardware Solutions

CAPS

CAPS TO SEAL

NBR : Nitryl-butadiene.

Caps with o-ring

	R-1424-3	37900-63	37900-65	37900-58
	High-temperature with washer	High-temperature with washer (nitrogen inflated)	High-temperature with washer	
Body material	Polyamide	Polyamide	Polyamide	
Color	black	green	red	
Seal	NBR	NBR	NBR	
Tightness torque (N. m)	0,2 to 0,35	0,2 to 0,35	0,2 to 0,35	
Quantity per box	100	100	100	5000
Use				

Caps with o-rings for Schrader Pacific Tire Hardware Solutions and VDO pressure sensors

	42321-69	T8029-100	T8029-20	T8030-100
Body material	Polyamide	Polyamide		Polyamide
Coulor	black	grey		green
Seal	NBR	NBR		NBR
Tightness torque (N. m)	0,2 to 0,35	0,2 to 0,35		0,2 to 0,35
Quantity per box	100	100	20	100

METAL CAPS

	33792-69	60166-71	R-0638-3	S-4653-2	R-0766-2	61323-67
	Moleté à joint		Sealing cap with core remover	With metal core remover	Knurled sealing cap	Knurled for tightening with pliers
Body material	Laiton nickelé	Chrome-plated	Nickel-plated brass	Brass	Brass	Brass
Seal	-	-	-	-	NBR	
Tightness torque (N.m)	0,2 to 0,35	0,2 to 0,35	0,2 to 0,35	0,3 to 0,5	0,3 to 0,5	0,3 to 0,5
Quantity per box	100	20	100	10	10	1
Code	-	-	-	-	-	A-149
Use						

AUTOMOBILE AIR-CONDITIONING PRODUCTS R134A AND 1234YF

STANDARD SHORT CORES

	42996-68	43000-68	43001-68
Valve washer	CR	FPM	HNBR
Tightness torque (N. m)	0,4 to 0,8	0,4 to 0,8	0,4 to 0,8
Fluid	R134a	1234yf	R134a
Quantity per box	10	10	10

SPECIAL CORE

Threaded body, only for use on appropriate vehicles nitrile butadiene rubber styrene-butadiene rubber

	32361-68
Valve washer	HNBR
Tightness torque (N. m)	0,56 to 1,13
Fluid	R134a
Quantity per box	10

- HNBR : hydrogenated nitrile butadiene
- CR : polychloroprene.
- FPM : fluorocarbon.
- EPDM : ethylene propylene diene rubber

LARGE BORE CORES

	37478-68	42393-68	41734-68	32421-68	32422-68
Valve washer	CR	EPDM	FPM	HNBR	HNBR
Tightness torque (N. m)	0,7 to 2,2	0,7 to 2,2	0,8 to 2,2	1,7 to 3,4	1,13 to 2.26
Fluid	R134a	R134a 1234yf	1234yf	R134a 1234yf	R134a 1234yf
Quantity per box	10	10	10	10	10

CAPS

NBR SBR: nitrile-butadiene styrene-butadiene

	41143-20	41199-20	43380-20	43374-20
Use	High pressure	Low pressure	Low pressure	High pressure
Thread	M8 x 1	M8 x 1	M8 x 1	M8 x 1
Washer	NBR SBR	NBR SBR	NBR SBR	NBR SBR
Tightness torque (N. m)	0,6 to 1,15	0,6 to 1,15	0,6 to 1,15	0,6 to 1,15
Fluid	R134a	R134a	1234yf	1234yf
Quantity per box	20	20	20	20

SCHRADER PACIFIC Tire Hardware Solutions

AIR CONDITIONING SERVICE BOXES

	66158-67	66818-67
Use	For R134A	For 1234 yf
Composition du kit	10 cores 32361 10 cores 32421 10 cores 32422 10 cores 37478 10 cores 42393 10 cores 42996 20 caps 41143 20 caps 41199 1 valve core screwdriver 65290-67	10 cores 32421 10 cores 32422 10 cores 42996 2 x 10 cores 42393 20 caps 43380 20 caps 43374 1 valve core screwdriver 65290-67

Chapter 5

PASSENGER VEHICLE WEIGHTS.
Schrader Pacific Tire Hardware Solutions offers a complete range of weights made of STEEL and ZAMAK

UTILITY VEHICLE WEIGHTS.
A range of weights for balancing utility and 4x4 vehicle rims made of steel and aluminium with hooks or adhesives

TRUCK WEIGHTS.
A range of weights for balancing truck tires and rims in
steel and aluminium with clamp or adhesive attachment.

TRUCK BALANCING BEADS.
The beads will automatically balance the complete wheel assembly
whatever the wheel position on both trucks and trailers thanks to the centrifugal force effect.

BALANCING PRODUCTS

- Car weights for steel and aluminium rims 62
- Adhesive motorcycle and car weights 63
- Weight kits and van weights 64
- Tools for weights 64
- Balancing beads 66
- Weights for trucks 68

BALANCE WEIGHTS

WEIGHTS WITH BUILT-IN SPRINGS FOR STEEL RIMS

Zinc coated

Zinc coated	Weight mass (g)	Quantity per box
S-6483-44	5	100
S-6511-44	10	100
S-6512-44	15	100
S-6513-44	20	100
S-6514-44	25	100
S-6515-44	30	100
S-6516-44	35	50
S-6517-44	40	50
S-6518-44	45	50
S-6519-44	50	50

Raw Zinc

Raw Zinc	Weight mass (g)	Quantity per box
65900-67	5	100
65901-67	10	100
65902-67	15	100
65903-67	20	100
65904-67	25	100
65905-67	30	100
65906-67	35	50
65907-67	40	50
65908-67	45	50
65909-67	50	50

WEIGHTS WITH BUILT-IN SPRINGS FOR ALUMINIUM RIMS

Zinc coated

Zinc coated	Weight mass (g)	Quantity per box
41796-44	5	100
41797-44	10	100
41798-44	15	100
41799-44	20	100
41800-44	25	100
41801-44	30	100
41802-44	35	50
41803-44	40	50
41804-44	45	50
41805-44	50	50

ADHESIVE WEIGHTS FOR ALLOY RIMS

Fe ACIER

Extra plates Zinc-coated steel

Extra plates epoxy steel

	No. of bars per box	Division	Dimensions (mm)
65684-67 (adh. Norton)	50	4 x 5 g + 4 x 10 g = 60 g	Th. 3,6 width 19 long 148
66886-67 (adh.std)	50		
66121-50	50		Th. 4 width 19 long 140

Fe ACIER

Extra plates Zinc-coated steel

	No. of bars per box	Division	Dimensions (mm)
369-100	100	4 x 2,5 g + 4 x 5 g = 30 g	Th. 2,8 width 19 long 119

Pb PLOMB

	No. of bars per box	Division	Dimensions (mm)
33622-39	50	4 x 5 g + 4 x 10 g = 60g	Th. 4.8 width 15 long 108.5
66122-50	50	7 x 5 g + 6 x 2,5 g = -50 g	Th. 7 width 11 long 105

Pb PLOMB

	No. of bars per box	Division	Dimensions (mm)
61491-67	25	25G x 4	Th. 6 width 19 long 109

ADHESIVE WEIGHTS FOR ALUMINIUM RIMS

65744-67

66089-67

61486-67

66970-67

65745-67

61520-67

Cutting module 65817-67
Spare blades 65816-67

SCHRADER PACIFIC
Tire Hardware Solutions

For alloy rims	Designation	Weight (kg)	Dimensions (cm)
61486-67	Roll of 1200 black adhesive masses of 5 g in epoxy steel	5	Roll width. 3,5 ø = 30
65744-67	Wall dispenser for adhesive weights 65743-67 and 66089-67, cutting tool incorporated.	5,2	500 x 420 (sold empty)
65745-67	Wall dispenser for adhesive weights 65743-67 and 66089-67, cutting tool incorporated.	8,1	
66970-67	Roll of 1000 adhesive epoxy steel weights of 5g. Th. 3.5 width 17.	5	Roll width. 2,7 ø = 33,5
61520-67	Roll of 1000 adhesive epoxy steel weights of 5g	5	Roll width. 2,5 ø = 30
66089-67	Roll of 1200 adhesive zinc-coated steel weights of 5g. Th. 3.5 width 19.	6	Roll width. 2,5 ø = 30

BALANCING BEADS FOR UTILITY AND VEHICLES

ELECTROSTATIC CLING BALANCING BEADS

- The beads automatically balance the complete wheel assembly whatever the wheel position, on both trucks and trailers thanks to the centrifugal force effect.
- The wheel assembly remains balanced even when the vehicle is stopped.
- Tire is balanced during its life time.
- No machinery needed.
- The product is environmentally friendly.
- Increases fuel economy and tire life.

	Contents		Qty. of packs per box	
65115-67	113 g	4 oz	48	65115-48
65116-67	142 g	5 oz	40	65116-40
65117-67	170 g	6 oz	36	65117-67
65118-67	227 g	8 oz	32	65118-32
65119-67	282 g	10 oz	28	65119-28
65120-67	340 g	12 oz	24	65120-24
65121-67	397 g	14 oz	20	65121-20
65122-67	454 g	16 oz	18	65122-18

Parts sold in bags

Download the Counteract application for precise calculation of the appropriate quantity

INSTRUCTIONS FOR USE

• For satisfactory results, check the table of recommended quantities according to the size of the tire to be balanced.
Simply open the packaging and place the bag inside the tire.
This method allows for use of an inflator gauge to place the tire on the rim.
• Mandatory leak test after handling.
• The pressure inside the tire will disintegrate the bag containing the beads.
• The beads automatically balance the turning mechanical and wheel turning unit.
• Use the vacuum to remove beads inside the tire before retreading.

	Designation
66887-67	Truck balancing beads, 7.5 kg bucket

Each bag of beads is sold with a core 43078 and a red cap 37900.

	Designation	Tightness torque (N.m)	Quantity per box
37900-65	Cap for identification of bead-balanced tires.	0.2 to 0.35	100
37900-58			5000

	Designation	Tightness torque (N.m)	Operating pressure (bar)	Quantity per box
43078-69	Core specially recommended for bead-balanced wheels.	0.23 à 0.56	0 to 14	100

BALANCE WEIGHTS

WEIGHTS WITH BUILT-IN SPRINGS FOR STEEL RIMS

Pb
LEAD

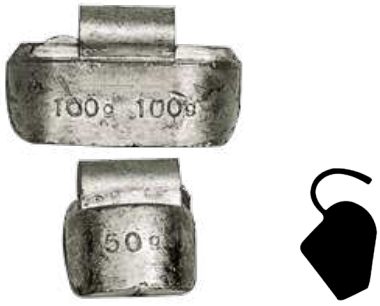

	Weight mass (g)	Quantity per box
60219-39	50	50
60220-39	75	50
60221-39	100	50
60222-39	150	25
60223-39	200	25
61521-67	250	10
61522-67	300	10

PLASTIFIED ADHESIVE WEIGHTS FOR ALUMINIUM TRUCK RIMS

- Operating temperature up to 150°C.
- Grey metal epoxy coating to prevent corrosion of the rim.
- Adhesive can be repositioned.

	Weight mass (g)	Quantity per box
33762-67	50	10
33763-67	75	10
33764-67	100	10
33765-67	125	10
33766-67	150	10
33767-67	200	10

Pb
PLOMB

	No. of bars per box	Division	Dimensions (mm)
61491-67	25	4 x 25 g = 100g	Thickness 8 width: 15 length: 108.5

TOOLS FOR WEIGHTS

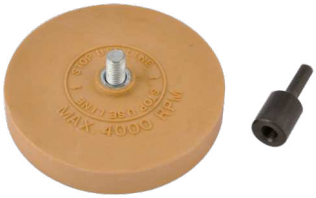

	Designation	Quantity per box
65463-67	All-purpose balance weight pliers with soft head	1
65797-67	Adhesive weight removal tool	1
66119-67	Rubber wheel with 6mm adaptor stem for removing glue residue from rims (max 4000 rpm)	1

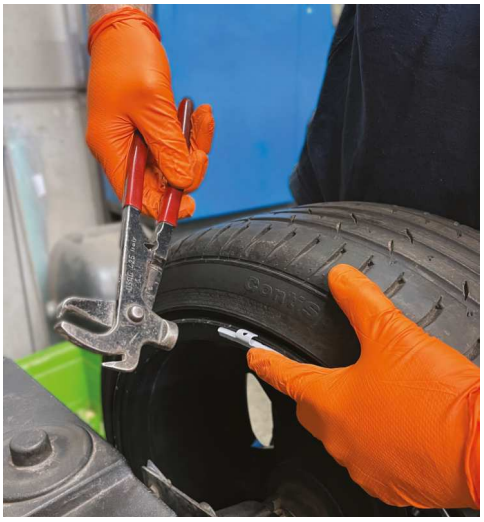

• Thoroughly clean the rim before attaching the weights

USING INFLATING GAUGES.

For best use of
inflating gauges, we recommend that you :

- Check that the needle is positioned at zero ± 0.1 bar before each use
- Make sure you regularly drain the compressed air network
- Use filtered, non-lubricated air
- Connect the device to a hose reel
- Regularly check airtightness intake and outlet valves
- Not overtighten the intake side coupler
- Never lock the inflating gauge handle while in use

Puncture prevention products contained in tires are
corrosive and prevent gauges from functioning correctly.

Follow the user instructions for water-ballasted tires.

SAFETY RECOMMENDATION.

Length of outlet hose:

L = 1.50 m

L = 3 m

L = 6 m

INFLATION AND COMPRESSED AIR EQUIPMENT

- Electronic inflating gauges with handle 74
  DIGITAIR® - EURODIGIT®.
- Mechanical inflating gauges with handle 75-76
  UNIVAIR® - EURODAINU®.
- Mechanical inflating gauges with buttons 77
  MASTAIR® - MAESTRO®.
- Inflation terminals 78
- Mechanical pressure gauges 81
  ARIVAIR - EURODAIRA®2
- Example of pressure gauge assembly 82
- Inflation nipples and couplers 83
- Inflation accessories 86
- Air guns, rapid inflation systems 88
- Booster 89
- Pump rings. 90
- Automatic winders and hoses, blow gun ..... 92 - 93
- Compressed air equipment 94
- Compressed air connecors 96

CHOOSING A PRESSURE GAUGE

	Digit'air	Eurodigit	Univ'air
Low pressure	■	■	
Auto calibration	■	■	
	■	■	
	■	■	
	■	■	
	■	■	
	■	■	■
	■	■	■
	■	■	■
	■	■	■
	■	■	■
Actuation	Handle	Handle	Handle
Display	Digital	Digital	Needle
Max overpressure	15 bar / 217 psi	15 bar / 217 psi	13.75 bar / 199 psi

MADE IN PONTARLIER, FRANCE

MADE IN FRANCE

French-made pressure gauges are manufactured each day in Pontarlier, thanks to you!

CHOOSING A PRESSURE GAUGE

MICHELIN

Eurodainu	Mast'air	Maestro
■	■	■
■	■	■
■	■	
■	■	
■	■	
Handle	Buttons	Buttons
Needle	Needle	Needle
13,75 bar / 199	15 bar / 217 psi	7.5 bar / 108 psi

ELECTRONIC INFLATING GAUGES WITH HANDLE

AIR OR NITROGEN USE

DIGIT'AIR®

EURODIGIT®

MICHELIN

(1)
DIGITAIR

0.10 to 11 bar

AUTOMATIC CALIBRATION UPON EACH USE

(2)
EURODIGIT

- Certificate of EC approval for LNE model N° 26944.
- LNE quality system certificate of approval No. 28617.
- German PTB certificate of approval.
- Declaration of verification delivered with product.

- Design - Robustness :
  - Very high level of measuring accuracy and maintenance of accuracy in the event of impact on the device
  - Strength: high-quality thermoplastic components
  - Corrosion-resistant thanks to internal mechanism made of specific materials
  - Air filtration in the indicator mechanism via microporous stainless steel and nickel silver filter
  - Device able to withstand accidental overpressure of 15 bar / 217 psi.

- Technology :
  - Automatic reset of zero on each inflation to prevent measurement drift
  - Resolution of 0.01 bar
  - Operating temperature : -10°C to +40°C
  - Easy to read, thanks to numbers with a height of 12 mm, display of the last smallest digit
  - Visual inspection of proper operation of digits on each pressurisation
  - Automatic turn on of pressure gauge when pressurised (Connection to the valve)
  - Automatic turn off when pressure removed or at constant pressure for more than 10 seconds
  - Battery service life : 10 years after manufacture in temperate environment (the battery is not replaceable)

		Graduation	Hose 7 x 13 mm		Air inlet side Torquer	Use
			length (m)	Hose P/N		
(1)	**39900-00**	0,10 to 11 bar	1,5	39064-00	F-G 1/4	
(1)	**39901-00**	1,4 to 160 psi *	1,5	39064-00	F-G 1/4	
(1)	**39902-00**	10 kPa to 1100 kPa *	1,5	39064-00	F-G 1/4	
(2)	**39927-00**	0,10 to 11 bar	1,5	39064-00	F-G 1/4	
(2)	**39929-00**	1,4 to 160 psi *	1,5	39064-00	F-G 1/4	
(1)	**39926-00**	0,10 to 11 bar	3	40117-67	F-G 1/4	
(2)	**39928-00**					
(1)	**39921-00**	0,10 to 11 bar	6	40122-67	F-G 1/4	
(2)	**39931-00**					
(1)	**39923-00**	1,4 - 160 psi (*)	6	40122-67	F-G 1/4	
(2)	**39933-00**					
(1)	**39925-00**	10 kPa - 1100 kPa (*)	6	40122-67	F-G 1/4	

The LNE certificates apply only to pressure gauges graduated in bar.

Sold without air inlet nozzle

* Sold for export only and according to local regulations.

SCHRADER PACIFIC Tire Hardware Solutions

MECHANICAL INFLATING GAUGES WITH HANDLE

AIR OR NITROGEN USE

UNIV'AIR®

(1)
UNIVAIR

0.7 to 11 bar

(2)
UNIVAIR

- Certificate approved for LNE model No. 6952.
- LNE quality system certificate of approval No. 14.10.821.003.4.
- Declaration of verification delivered with product.

- Air inlet connector F G 1/4
- Watertight performance reinforced with a transparent dial.
- Rubber protector around the measuring system.
- Very high measuring accuracy with this level of accuracy maintained in the event of an impact on the device.
- Robustness : IXEF material in glass fibre-reinforced high technology plastic.
- Safety handle.
- Corrosion resistant internal mechanism.
- Air filtered in the indicator mechanism by stainless steel and nickel silver micro-porous filter.
- Device resistant to accidental high pressure of 13.75 bar / 199 psi in compliance with the standard.

		Graduation	Hose 7 x 13 mm		Air inlet side Torquer	Use
			Length (m)	Hose P/N		
(1)	**39700-00**	0,7 to 11 bar	1,5	39064-00	F- G 1/4	
(2)	**39702-00**	0,7 to 11 bar / 10 to 160 psi *	1,5	39064-00	F- G 1/4	
(1)	**39701-00**	0,7 to 11 bar	3	40117-67	F- G 1/4	
(1)	**39703-00**	0,7 to 11 bar	6	40122-67	F- G 1/4	
(2)	**66892-00**	0,7 to 11 bar / 10 to 160 psi *	6	40122-67	F- G 1/4	

The LNE certificates apply only to pressure gauges graduated in bar.

Sold without air inlet nozzle
* Sold for export only and according to local regulations.

MECHANICAL INFLATING GAUGES WITH HANDLE

AIR OR NITROGEN USE

EURODAINU®

0.7 to 11 bar

- Rubber protector around the measuring system.
- Very high measuring accuracy with this level of accuracy maintained in the event of an impact on the device.
- Robustness : IXEF material in glass fibre-reinforced high technology plastic.
- Safety handle.
- Corrosion resistant internal mechanism.
- Air filtered in the indicator mechanism by stainless steel and nickel silver micro-porous filter.
- Device resistant to accidental high pressure of 13.75 bar / 199 psi in compliance with the standard.

- Certificate approved for LNE model N° 33762.
- LNE quality system certificate of approval
- Declaration of verification delivered with product.

	Graduation	Hose 7 x 13 mm		Air inlet side Torquer	Use
		L (m)	Hose P/N		
R-1822-Z	0,7 to 11 bar	1,5	39064-00	F-G 1/4	
R-1821-Z	0,7 to 11 bar / 10 to 160 psi *	1,5	39064-00	F-G 1/4	
38879-58	0.7 to 11 bar	3	40117-67	F-G 1/4	
38902-58	0.7 to 11 bar	5	40122-67	F-G 1/4	

The LNE certificates apply only to pressure gauges graduated in bar.

Sold without air inlet nozzle

* Sold for export only and according to local regulations.

MECHANICAL INFLATING GAUGES WITH BUTTONS

AIR OR NITROGEN USE

MAST'AIR®

(1)
MASTAIR

0,7 to 12 bar / 10 à 170 psi

MAESTRO

0,7 to 6 bar / 10 à 85 psi

(2)
MAESTRO

ADVANCED TECHNOLOGY AND DESIGN
- Built in + / – buttons make inflating virtually effortless.
- Rotatable nipples (air inlet/outlet) make for simple and easy handling.
- Quick pressure adjusting.
- Slanted, coloured dial for easy read-out.

SOLID CONSTRUCTION
- Shock-resistant ABS material.
- Hangs anywhere thanks to its handy bracket.
- Watertight glass shield

- LNE quality system certificate of approval
- Declaration of verification delivered with product
- Sold for export only and according to local regulations.

		Double graduation	Hose 7 x 13 mm		Air inlet side Torquer	Use
			Length (m)	Hose P/N		
(1)	**39100-00**	0,7 to 12 bar / 10 to 170 psi	1,5	39064-00	R-0987-2 (Drake)	
(1)	**39106-00**	0,7 to 12 bar / 10 to 170 psi	1,5	39064-00	G 1/4 (39066-67)	
(2)	**39103-00**	0,7 to 6 bar / 10 to 85 psi	1,5	39064-00	R-0987-2 (Drake)	
(2)	**39111-00**	0,7 to 6 bar / 10 to 85 psi	1,5	39064-00	G 1/4 (39066-67)	
(1)	**39104-00**	0,7 to 12 bar / 10 to 170 psi	3	40117-67	R-0987-2 (Drake)	
(1)	**39101-00**	0,7 to 12 bar / 10 to 170 psi	6	40122-67	R-0987-2 (Drake)	

Sold without air inlet nozzle

INFLATION TERMINALS

Use AIR

PRE-PROGRAMMABLE ELECTRONIC WALL TIRE INFLATORS

For inflating, deflating and adjusting pressure after programming the desired pressure

(1)

(2)

Terminals provided with non-return valve and wall mounting.
Terminals provided without hose and connectors : order separately

		Graduation	Description
(1)	**66541-67**	0.3 to 10 bar	LNE approved for France and DROM-COM
(2)	**65786-67**	0.3 to 12.5 bar	Sold with bar as default but can be reprogrammed for PSI or KPA. Sold for export only and according to local regulations in Europe for France and DROM-COM

INFLATION TERMINAL ACCESSORIES

40058-67	Hose ø7x13 mm, L = 10 m for trucks, woven braid with 1 clamp connector R-0985 valve side, quick coupler + G 1/4 inflator side
40059-67	Woven braid hose L= 20 m, for truck use, with one clamp connection R-0985 valve side, quick coupler + G 1/4 inflator side
44096-67	Hose ø7x13 mm, L = 20 m for use in construction applications, textile braid with 1 studded fitting R-0984 on valve side, quick-connect coupling + G ¼ 65088 on terminal side

Declaration of conformity provided with product.

TECHNICAL INFORMATION

- Reading precision : 0.02 bar.
- Inside or outside installation (IP66).
- Operating temperature : 0 to 60°C.
- Aluminium cabinet
- Ergonomic design, easy to use.
- Large backlit LCD display.
- Information on Psi or KPa equivalent (65786-67).
- 230 V required electrical supply
- Automatic zero setting before each use.
- Dimensions : 269 x 285 x 106 mm.
- Max air intake pressure : 10 bar.
- Flow at 10 bar : 4000L./min
- Conical thread F-G 1/4 air inlet connection.
- Conical thread F-G 1/4 outlet.
- Attachment hook for hose.
- Weight : 5.4 kg.

INFLATION CAGE

TIRE INFLATION CAGE

61599-67	Tire inflation and deflation with total safety. Ideal for large tires, up to 199 cm in diameter and 48 cm in width. Certified for tire inflation up to 9 bar. Graduation : bar/psi.

TIRE INFLATING BARRIER

61621-67	Tire inflating safety barrier for OTR tires. Tires up to 80''. Certified for tire inflation up to 9 bar. Graduation : bar/psi.

AIR OR NITROGEN USE

ARIVAIR

EURODAIRA®

(1)

(2)

(3)

(1)
ARIVAIR

0.7 to 12 bar

(2) (3)
EURODAIRA

- Reliability
- Robustness
- Accuracy
- By changing the tube fitting, the monitor can be used for trucks or construction applications.
- Improved leaktightness thanks to use of a snap-on transparent cover.
- Elastomer protector covering the measuring system.
- Very high level of measuring accuracy and maintenance of accuracy in the event of impact on the device.
- Strength: Mineral-fibre-reinforced copolyamide material.
- Device able to withstand accidental overpressure of 15 bars / 217 psi.

		Graduation	Hose 5 x 10 mm Length (m)	Angled air chucks	Use
(1)	38075-99	0.7 to 12 bar	0.5	R-0415-1	
(2)	38048-99				
(1)	38076-99	0.7 to 12 bar / 10 to 170 psi *	0.5	R-0415-1	
(2)	38049-99				
(3)	R-1782-1	0.7 to 12 bar	0.5	-	
(3)	R-1781-1	0.7 to 12 bar / 10 to 170 psi *			
(1)	38077-99	0.7 to 12 bar	0.5	R-0933-1	
(2)	38038-99				
(1)	38078-99	0.7 to 12 bar / 10 to 170 psi *	0.5	R-0933-1	
(2)	38039-99				

* Sold for export only and according to local regulations.

PRESSURE GAUGES

AIR OR NITROGEN USE

TREAD DEPTH GAUGE & ELECTRONIC PRESSURE GAUGE

2 functions on one tool

- Automatic turn-off.
- Backlit dial.
- 2 interchangeable batteries CR2032.
- Tread depth or pressure gauge selection function.

	Pressure gauge	Tread depth gauge	Use
66185-67	• 0.35 to 6.8 bar (5-99 psi or 35-680 Kpa or 0.4-7.00 kg/cm²). • Accuracy: 1 % ±0,05 bar	• Graduated from 0 to 15 mm (0 to 19/32''). • Coloured zone according to depth <1.6 mm = coloured zone red 1.6 to 3.2 mm = coloured zone yellow >3.2 mm = coloured zone green • Precision : 0.3 mm. • Resolution : 0.1 mm.	

ELECTRONIC PRESSURE GAUGES WITH DIGITAL DISPLAY

For checking pressure

Schrad'DIGITAL

	Graduation	Descriptive	Use
60226-67	0,35 to 10 bar	• Special for low pressure. • Accuracy : 1 % ±0,05 bar. • Can be use from -10 to 50°C. • Durable rubber grip handle. • 3 interchangeable LR44 batteries (included).	

EXAMPLES OF PRESSURE GAUGE ASSEMBLY

Truck, farm and earthmover vehicle
Light vehicle

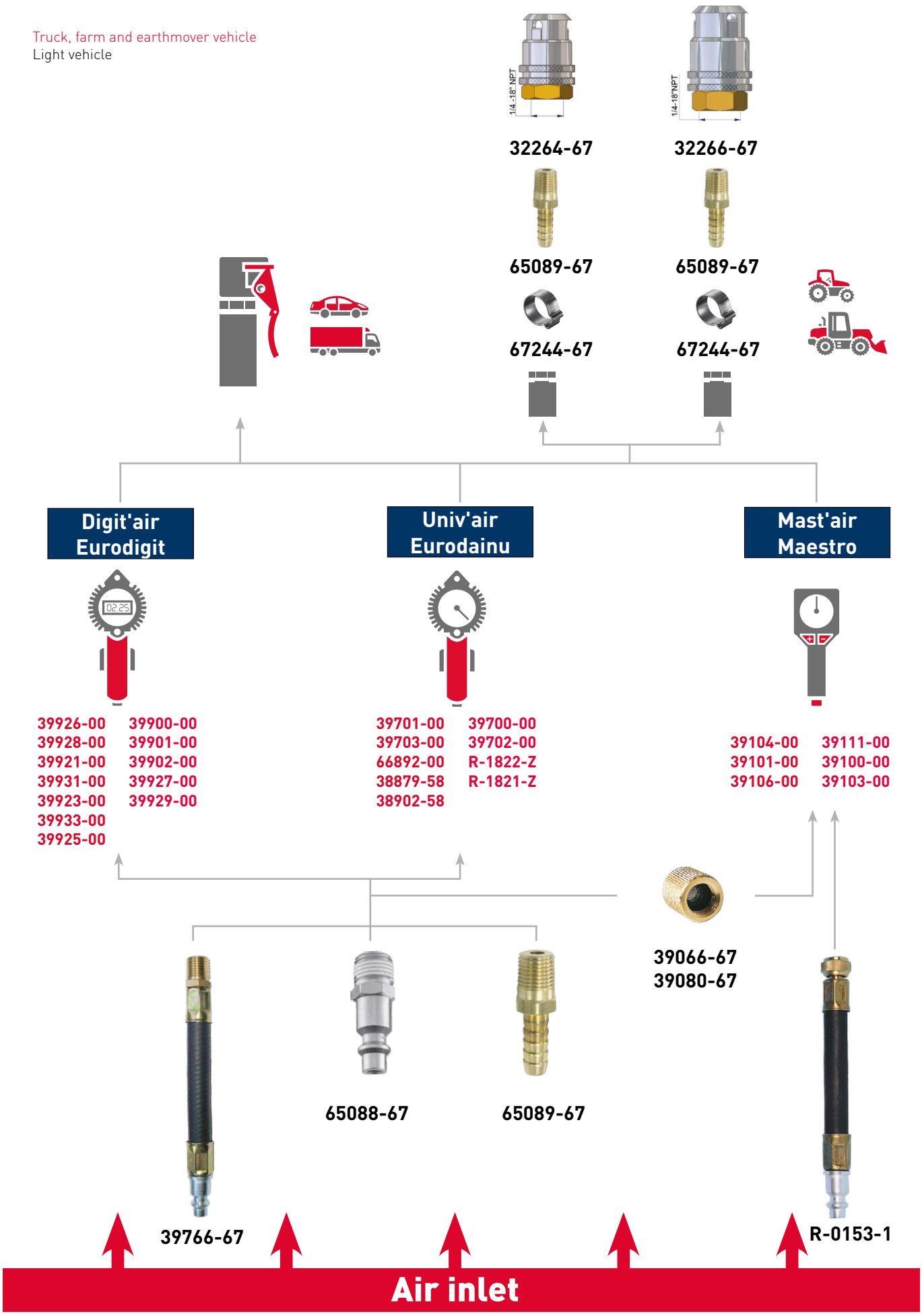

SCHRADER PACIFIC
Tire Hardware Solutions

INFLATION NIPPLES AND COUPLERS

39066-67	39080-67	65088-67	65089-67
Adaptor G 1/4 without filter for Mastair and Maestro	Adaptor G 1/4 with filter for Mastair and Maestro	Teflon-coated threaded quick coupler G 1/4	Junction connector for hose Ø int. 6 - 7 mm conical threaded G 1/4

EAR COLLARS

	67163-68	65097-68	65096-68	65095-68	67244-68
Description	For tube Ø ext. 29 mm	For tube Ø ext. 27 mm	For tube Ø ext. 20 mm	For tube Ø ext. 16 mm	For tube Ø ext. 13 mm
Clamping range (mm)	28-31	25-28	20-23	14-17	11-13
Quantity per box	10	10	10	10	10

39766-67	R-0153-1
Intermediate-sized coupler for inflating gauges with a G 1/4 air inlet coupler	Intermediate-sized coupler for inflating gauges with a coupler R-0987-2 (Drake)

INFLATION COUPLERS

COUPLERS FOR HOSES INTERNAL Ø 7 MM

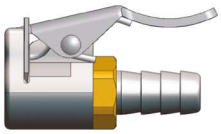

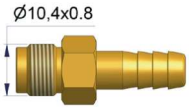

	R-0985-2	R-0985-1	R-0986-2
Description	Valve side inflation coupler for hose 7 x 13 mm	Coupler R-0985-2 in skin-pack for display purposes	House coupler, outlet side for hose 7 x 13 mm
Spare washer	R-0518-2	R-0518-2	
Quantity per box	10	1	10

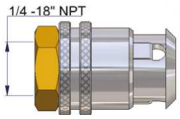

	R-0987-2	32264-67	R-1430-2
Description	Rotating coupler inlet side for hose 7 x 13 mm	Quick inflating coupler clamp coupler, valve side	Collet for hose 7 x 13
Quantity per box	10	1	10

OTHERS CONNECTORS

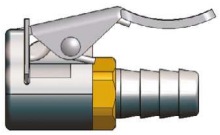

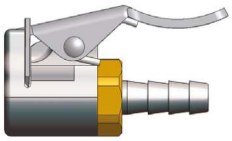

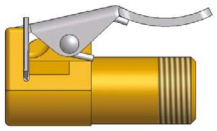

	41291-68 41291-09	R-0517-2	R-1296-1	R-3500-2
Description	Inflation coupler valve side for 8 mm hose (Spare washer R-0518-2)	Valve side inflation coupler for hose 5 x 10 mm (Spare washer R-0518-2)	Coupler for adapting EM to truck	Rotating coupler for flexible hose extensions ø int. of 5 mm
Quantity per box	10 500	10	1	10

(*) Knurled coupler : hand-tightening only.

SCHRADER PACIFIC
Tire Hardware Solutions

INFLATION COUPLERS

LARGE BORE CONNECTORS

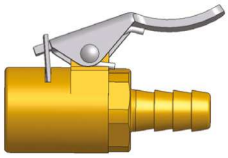
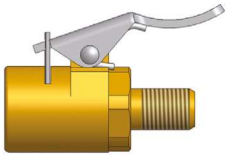
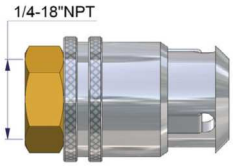

	R-0984-1	R-0767-1	32266-67
Description	Earthmover inflation coupler for hose ø int. 7 mm (Spare washer R-0917-2)	Standard / LB intermediate mobile coupler (Spare washer R-0917-2)	Quick LB clamp on inflation coupler
Quantity per box	1	1	1

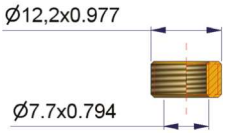

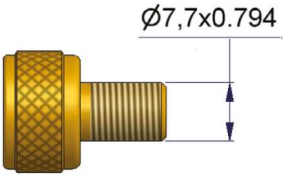

	R-0736-2	R-0697-1
Description	Ring for mounting of large-bore valves on truck spuds	Mobile coupler to adapt LB mouths to trucks
Quantity per box	10	1

INFLATION ACCESSORIES

HOSE 7X13 FOR INFLATING GAUGES

	39064-00
Description	For DIGITAIR, EURODIGIT, UNIVAIR, EURODAINU, MAESTRO & MASTAIR
Lenght (m)	1,5
Type	Woven braid, rotating nut, coupler R-0985-2
Quantity per box	1

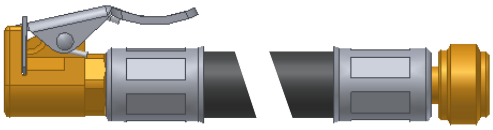

	40117-67	39065-00	40122-67
Description	For DIGITAIR, UNIVAIR, EURODAINU, MAESTRO & MASTAIR	For UNIVAIR, EURODAINU & MASTAIR (Earthmover)	
Length (m)	3	3	6
Type	Woven braid, rotating nut, coupler R-0985-2	Woven braid, rotating nut, coupler R-0984-1	

INFLATING CHUCKS

	R-0415-1	R-0933-1	35934-99
Description	Makes pressure checking easier on valves that are difficult to get to or twin valves	Makes pressure checking easier on valves that are difficult to get to or twin valves	Inflating Chuck with deflate button
Use			

SCHRADER PACIFIC Tire Hardware Solutions

	61181-67
Description	Dual ended coupler specially designed for twin wheels for hose Ø 8
Use	

INFLATION ACCESSORIES

HOSE 5X10 FOR EURODAIRA PRESSURE GAUGES

	R-0416-1	S-4451-1
Description	For ARIVAIR and EURODAIRA with chuck	For ARIVAIR and EURODAIRA without chuck
Length (cm)	50	50
Précaunisation	Use a car clamp ø 10 mm to mount it on the gauge	

PUSH ON COUPLER FOR CHUCKS

Hand-tightened only.

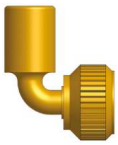

	R-0038-1	R-0904-1
Description	For chuck R-0415-1	For chuck R-0933-1
Spare washer	R-0518-2	R-0917-2
Use		

AIR CANNONS, PUMP RINGS

AIR CANNONS

Filtered and lubricated air supply (see page "Air treatment unit "GLOBAL FRL SYSTEM"", page 94).

BOOST'AIR 20

BOOST'AIR 35

	65063-00	61417-67	61418-67
Utilisation	For Truck	For Truck	Big Tires, Small Earthmover
Tank (L)	20	20	35
Pressure max (bar)	12	14	12
Wieght (Kg)	14	5	5
Inner air	1 quick connector male light vehicle		
Material	steel	alu	alu
Sizes	480 x 370	480 x 246	660 x 276
Type of rim	1 pcs	1 pcs	1 pcs

65332-67	69668-67	69669-67	65842-67	65843-67	65844-67
Glycerine pressure gauge	Elbow	MF 1/2 x 1/4 GF reducing nipple coupling	M/F 1/4 rotating-seat valve	M/F 1/2 rotating-seat valve	Painted booster fitting

BEAD BAZOOKA®

The spare parts must be replaced by an authorized person.

	61300-67
Use	For 4x4 and trucks
Tank (L)	6L
Weight (Kg)	5.56

BOOSTER HIGH-FLOW VALVE

FOR INSTALLATION OF TUBELESS TIRE BEADS

SAVE TIME WITH
UP TO 3X FASTER
INFLATION

Video Booster

High-flow valve that does not adjust tire pressure:
It is not an inflator with pressure gauge
Use a standardised tool.

	44073-67 BOOSTER
Use	
Graduation	1 to 11 bar / 10 to 160 psi
Long nose (m)	6 m on the valve side / 0.3 m on the air inlet side
Type of rim	1 piece, 3 pieces and 5 pieces

PUMP RINGS

RIGID BEAD SEATERS/PUMP RINGS

(1)

(2)

(3)

(4)

	(1)	(2)	(3)	(4)
	60806-67	**60807-67**	**60808-67**	**60814-67**
Dimensions (")	13	14	15	16
Spare washer	-	-	-	**65213-67**
Quantity per box	-	-	-	1

(1)

(2)

(3)

(4)

(5)

(6)

	(1)	(2)	(3)	(4)	(5)	-
	60809-67	**60810-67**	**60816-67**	**60811-67**	**60817-67**	**60818-67**
Dimensions (")	17.5	19.5	20	22.5	24	26
Spare washer (6)	**65214-67**	**65215-67**	-	**60812-67**	-	-
Pieces per box	1	1	1	1	1	1

FLEXIBLE PUMP RINGS

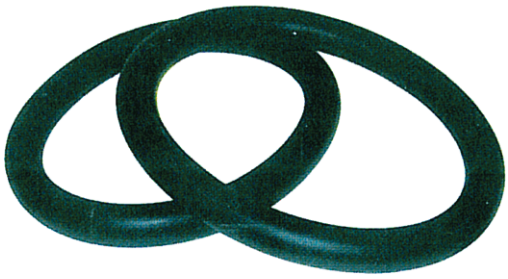

	65789-67	65790-67	65791-67
Dimensions (")	16.5 to 17.5	19.5	22.5 to 24.5
Pieces per box	1	1	1

AUTOMATIC WINDERS AND HOSES

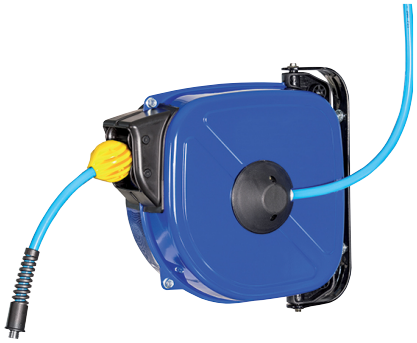

- Automatic spring loaded spiral blade reel with 180° swivel support 180° swivel support.
- Epoxy coated steel housing.
- Hose guide and stop.
- Feeding sleeve supplied.
- Hose locking by ratchet.
- Delivered without outlet fitting.
- Maximum operating pressure : 12 bar
- Operating temperature : -15°C to 65°C
- Installation: wall-mounted at a height of 2.50 m.

	Max. dimensions (depth. x h x th.) (mm)	Hose length (m)	Hose	Weight (kg)
66667-67	370 x 337	15	Polyurethane / PVC Ø int. 8 x 12 mm sold with threaded nipple G1/4	7
66668-67	Spare hose 15 m for winder 66667-67			
65082-67	Threaded quick coupler G1/4			

- Open-drum winder
- Sold with directional base.
- Hose stop by a locking device.
- G 1/2 nipple.
- Operating pressure : 18 bar.
- Operating temperature : 60°C.
- Set up : wall installation at 2 m high.

UTILISATION INTENSIVE

	66964-67	66965-67
	Open-drum, woven braided hose, 1/2G Operating pressure : 18 bar, fixed base, sold without connector	Spare hose
Max. dimensions (depth. x h x th.) (mm)	495 x 442	
Hose length (m)	20	
Ø hose (mm)	13x18	
Weight (kg)	20	

	61487-67
	Compressed air reel 15m M3/8 inlet Max pressure 20
Max. footprint (depth x height) (mm)	205 x 378
Pipe length (m)	15
Ø pipe (mm)	8x14
Weight (kg)	6.50

SCHRADER PACIFIC Tire Hardware Solutions

AUTOMATIC WINDERS AND HOSES

- Sold without rotating base
- Hose stop by a locking device.
- Epoxy-coated steel sheet cabinet
- Operating pressure : 12 bar
- Operating temperature : -15°C à 40°C

	Max. dimensions (depth. x h x th.) (mm)	Hose length (m)	Hose	Weight (kg)
61449-67	370 x 337	20	Polyuréthane / PVC Ø int. 8 x 14 mm sold with threaded nipple 3/8G	19
61451-67	Spare hose 20m for winder 61449-67			
61450-67	Rotating base for 66964-67 and 61449-67			

Hose coils

	Length: Hose (m)	Ø (mm)	Braid type
S-6570-1	10	7 x 13	Textile braid for impact wrenches
S-6571-1	20		
S-6572-1	30		
S-0346-1	15	9 x 16	
S-0347-1	25		
S-0348-1	12	13 x 21	
S-0349-1	20		

Coiled hoses

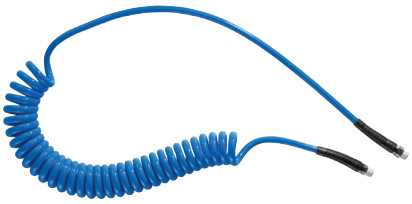

	Length (m)	Description
65100-67	4	Polyurethane hose 6.5 x 10 mm. Equipped with fixed-rotating male couplers G 1/4. Working pressure: 9 bar.
65255-67	6	
65101-67	8	

Progressive air gun

	Description
65098-67	Progressive blow gun with tapped curved nozzle G 1/4 on metal insert Max operating pressure : 10 bar Max. flow : 380 L/min at 6 bar.
65099-67	Blowing assembly, coiled hose L = 4 m. Fitted with blow gun 65098-67

COMPRESSED-AIR EQUIPMENT

AIR TREATMENT UNIT "GLOBAL FRL SYSTEM"

Filters → *Regulates* → *Lubricates* → Clean and dry air

COMPLETE SET:
Filter + Regulator + Lubricator in 1/2'':
order refs 61461-67 + 61462-67 + 61463-67 + 61470-67 + 61464-67 x 2.

- Complete compact FRL system 1/2''.
- Alloy body.
- Maxi pressure 17 bar.
- BSPP connection.
- Metal tanks.
- Operating temperature : -10 to +65.5 °C.
- Use special oil P/N 65775-67.

Coalescing Filter 1/2"
with inter-module plate (complementary item) :
order P/N 61466-67 + 61467-67.

COMPLETE UNIT:
Regulator + elbo + connection kit + lubrificator + gauge
61456-67 + 61459-67 + 61458-67 + 61457-68 + 61460-67

SCHRADER PACIFIC
Tire Hardware Solutions

COMPRESSED-AIR EQUIPMENT

	61461-67	61466-67	61462-67	61465-67	61463-67
Type	5 µm particle filters	Coalescence filter absorbing 0.01 µm	Regulator	Filter/Regulator 5 µm filter element	Lubrificator
Hole opening (")	1/2	1/2	1/2	1/2	1/2
Description	Body : Aluminium Polycarbonate bowl with metallic protection		Body : Aluminium Polycarbonate bowl with metallic protection	Body : Aluminium Polycarbonate bowl with metallic protection	Body : Aluminium Polycarbonate bowl with metallic protection
Flow rate at 6 bar (L/min)	3500	1500	4000	3000	5650
Max. flow (bar)	12	12	15	12	12
Dimensions h x width x depth (mm)	70 x 112	70 x 172	70 x 165	70 x 280	70 x 190

	61468-67	61470-67	61460-67	61464-67	61467-67	61459-67	61469-67
Description	Filter-Regulator (gauge included) with wall bracket / flow rate at 7 bar 550 / max flow : 12 bar / G1/4"	Round gauge Ø 50 mm graduation 0-16 bar / 1/4"	Double graduation round gauge Ø 40 mm 0-10 bar / 0-150 PSI / 1/8"	Wall connection/ fixture bracket kit for 2 modules 1/2"	connection kit for 2 modules 1/2"	Tapered male / Parallel female elbow / Brass and nickel-plated brass 1/8"	Tapered male / Parallel female elbow / Brass and nickel-plated brass 1/4"

COMPRESSED AIR CONNECTORS

	66738-67	65083-67	65084-67	61288-67
Description	Threaded quick Y-shaped double coupler	Threaded quick coupler	Grooved coupler	
Tapping (Gaz BSP)	G 1/2	G 1/4 Teflon coated	6 - 7	8
Ø air passage (mm)	6	6	6	6
Flow (L./min.) at 6 Bar	883	883	883	883
Maxi operating pressure (bar)	16	16	16	16
Quantity per box	1	1	1	1

	66617-67	61481-67	65082-67	61473-67	61472-67	61471-67	61452-67	66739-67	65090-67
Description	Threaded quick coupler								
Tapping (Gaz BSP)	G 1/4	G 3/8	G 1/2	G 1/4	G 3/8	G 1/2	G 3/8	G 3/4	G 1/2
Quantity per box	1	1	1	1	1	1	1	1	1
Ø air passage (mm)	6	6	6	8	8	8	11	11	11
Flow (L./min.) at 6 Bar	883	883	883	1800	1800	1800	3686	3686	3686
Maxi operating pressure (bar)	16	16	16	16	16	16	16	16	12

SCHRADER PACIFIC Tire Hardware Solutions

	66813-67	61289-67	66618-67	65091-67
Description	Barbed quick-connect fitting			
Tapping (Gas BSP)				
For hose Ø int. (mm)	9	10	13	13
Ø air passage (mm)	8	6	8	11
flow (L./min.) at 6 Bar	1800	883	1800	3686
Maxi operating pressure (bar)	16	16	16	16
Pieces per box	1	1	1	1

- Automatic sleeve couplers featuring a clamp attachment system: effortless connection and total tightness.
- Abrasion, shock, crushing and vibration resistant materials.
- Optimum flow adapted to all pneumatic tools thanks to contoured plug.
- Operating temperature: -15 to +70° C.

	61454-67	61455-67	61453-67
Description	Threaded quick coupler		
Tapping (Gas BSP)	G 1/2	G 3/4	G3/8
Pieces per box	1	1	1
Air passage	11	11	11
Flow (L./min.) at 6 Bar	3686	3686	3686
Maxi operating pressure (bar)	16	16	16
Jonction cannelée	65094-67		65089-67

MISCELLANEOUS CONNECTORS

According to assemblies, use adaptor 65591-67 M1/4''-M1/4''

	65491-67	65578-67	65579-67
Description	Quick connect filter connector for all air-hydraulic devices (except impact wrenches, see page page 172) conical threaded G 1/4	360° bi-directional connector. Keeps the hose straight and strain-free Improves handling and use of pneumatic tools and inflating gauges. F inlet: G 1/4 M outlet: G 1/4 Flow: 0 to 45 m3/h under 7 bar	Pre-set line regulator Mounted upstream of the pneumatic tool, the regulator adjusts the pressure to avoid an air over-consumption and an overpressure on tools. (except impact wrenches, see page 184) F Inlet/Outlet F: G1/4 Maximum inlet pressure: 18 bar, outlet pressure: 8 bar Max. flow: 700 l/min
Quantity per box	1	1	1

COMPRESSED AIR CONNECTORS

	65086-68	65087-68	61583-67	61492-67	65270-67	65780-67
Description	Quick tapped connector			Tapped connector	Double junction connector	
Tapping (Gaz BSP)	G 1/4	Michelin pitch with flat seal	G 3/8	G 1/4	-	-
Ø air passage (mm)	6	6	6	8	6	11
Flow (L./min.) at 6 Bar	883	883	833	2028	883	3686
Maxi operating pressure (bar)	16	16	16	16	15	15
For hose Ø int. (mm)	-	-	-	-	6-7	12-13
Quantity per box	10	10	1	1	1	1 10
Vehicle utilisation						

SCHRADER PACIFIC Tire Hardware Solutions

COMPRESSED AIR CONNECTORS

	65088-67 65088-68	61493-67	66619-67	61584-67	65845-67	65093-67	65089-67 65089-68	65094-67 65094-68
Description	Conical threaded quick connector	Threaded connector	Conical threaded quick connector				Junction connector	
Tapping (Gas BSP)	G 1/4 teflon-coated	G 1/4	G 1/2 teflon-coated	G 3/8 teflon-coated	G 3/8 teflon-coated	G 1/2 teflon-coated	G 1/4	-
For hose Ø int. (mm)							6-7	13
Ø air passage (mm)	6	8	8	8	11	11	6	11
Screw thread conical (Gaz BSP)								G 1/2
Flow (L./min.) at 6 Bar	883	2028	1800	2028	3686	3686	883	3686
Maxi operating pressure (bar)	16	16	16	16	16	16	15	15
Pieces per box	1 10	1	1	1	1	1	1 10	1 10
Vehicle utilisation								

	65085-68	61290-67 61290-68	61291-67 61291-68	66814-67	66620-67	65092-67
Description	Quick junction for hose					
For hose Ø int. (mm)	6-7	8	10	10	13	13
Ø air passage (mm)	6	6	6	8	8	11
Flow (L./min.) at 6 Bar	883	883	883	1800	1800	3686
Maxi operating pressure (bar)	16	16	16	16	16	16
Pieces per box	10	1 10	1 10	1	1	1
Vehicle utilisation						

ASSEMBLY EXAMPLES

Compressed air circuit

66964-67
+ 61450-67

61449-67
+ 61450-67

Ø 6

Ø 8

61454-67 ou 65090-67

61481-67

61472-67

65088-67

65093-67
or (recommended)
66665-67

61493-67

SCHRADER PACIFIC
Tire Hardware Solutions

Compressed air circuit

61449-67
+ 61450-67

Ø 8

61472-67

61492-67

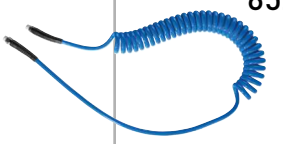

65255-67

65082-67

65088-67 or
Power supply kit
65796-67

Pneumatic Grinder

61449-67
+ 61450-67

Ø 8

Ø 6

61472-67

61481-67

65088-67

61493-67

or recommended
tip with fitting
65491-67

Jacks (page 182-183)

EXAMPLES OF FRL ASSEMBLIES

61468-67

(air circuit connection)

61487-67 or 61449-67

Ø 6

Ø 8

61481-67

61472-67

65088-67

61493-67

61465-67
+
61463-67
+
61464-67
+
61460-67

66964-67
+ 61450-67

61454-67

65093-67

66865-67
65810-67
66670-67

The LABELLING SYMBOLS FOR HIGH-RISK PRODUCTS

are given for information purposes only. The products are liable to change and their safety sheets are at your disposal.

We recommend wearing gloves and protective goggles when executing repairs.
Aware of the changes in the law and to the "C.M.R." decree, Schrader Pacific Tire Hardware Solutions is offering chlorinated and aromatic hydrocarbon free products that comply with the "REACH" regulation.
Our patches comply with repair standards ECE-R108 and R109.

STORAGE OF PARTS.

To maintain the expiry dates, store the parts, products and solutions :

- In a clean dry place.
- Away from sunlight and heat.
- Recommended temperature: between 15 and 30° C (save specific product info) Keep the containers closed.
- Complete repair instructions can be found in the box or on request.
- Follow the corresponding fitting and application instructions to make repairs according to professional practice codes, i.e. adhering to reparability criteria and performing each operation according to a well defined procedure, whatever the repair.

FORMATION:
Schrader Pacific Tire Hardware Solutions provides trainings on repair products.

PATCHES AND REPAIR PRODUCTS FOR TIRES AND TUBES

premium range soft gum

- PRP : Tube repair parts ("mushrooms" type) 106-107
- TRP : Plugs for cold tire repair 108
- PRC : Tire repair parts 110
- PRF : Parts for cold tire repair 112
- SR : Parts for radial tires 113
- SRR : Retrad patches for radial tires 114
- SD : Patches for bias tires 115
- Solutions for patches and brushes 116

premium range hard gum

- PRC : Tire repair parts 118
- PRF : Parts for cold tire repair 120
- SCHRAD an SCHRAD+ : patches for radial tire repair 121-122
- SDO+ : patches for the repair of bias tires 123
- Solutions for patches and brushes 124-125
- Brushes and talc 126-127
- Emergency repair inserts 128
- Tire puncture prevention 130
- Material for rubbers 134

PRP TUBE REPAIR PARTS

PRP 3 - PRP 4,5 - PRP 6 - PRP 8 - PRP 10

- (1) Up to the speed index J included for a maximum of 2 repairs
- (2) Up to the speed index T included.
- Comply with local legislation in all cases. It may vary from one country to the next.

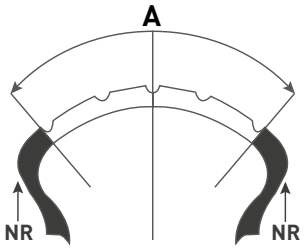

FIG. 1

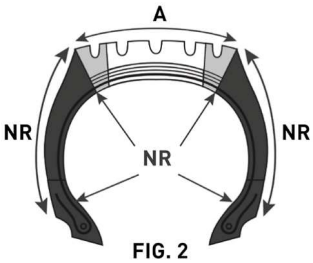

FIG. 2

A: Tire tread NR: Not repairable zone

		Use	BIAS-PLY				RADIAL-PLY			
			A		B		A			B
			PRP 3	PRP 6	PRP 3	PRP 6	PRP 3	PRP 4,5	PRP 6	PRP 3
(1)	Scooter 10''		X				X			
(1)	Motorbike & scooter		X	X (1)			X	X(1)	X(1)	
(2)	Passenger car		X	X	X	X	X	X	X	X(2)
(2)	Van & 4x4		X	X	X	X	X	X	X	X(2)

		Use	BIAS-PLY				RADIAL-PLY					
			A		B		A			B		
			PRP 6	PRP 10	PRP 6	PRP 10	PRP 6	PRP 8	PRP 10	PRP 6	PRP 8	PRP 10
(1)	Truck						X	X	X			
(1)	Agriculture		X	X	X	X	X	X	X	X	X	X
(2)	Public works – OTR						X	X	X	Use of tire repair parts (PRP) not recommended		
(2)	Handling & cranes						X					
	Double X Type F						X	X	X			
	XM27/37 A2 B & A8						X	X	X			

RAPID AND RELIABLE REPAIR:
- Specially designed for punctures made by nails, screws, bolts.
- The tire must be dismounted to assess its condition and suitability for repair.
- Repair from the inside of the tire. This is the only way of ensuring a quality reliable and safe repair.
Structure of tire protected against moisture optimising the possibilities of retreading.
- PRP range adapted for all types of tire according to the table below.
Efficient permanent and immediately ready for further service.
- Quick and easy repair. Efficient, permanent and immediately ready for further service
(Number of repairs allowed per tire is not limited except for motorcycles).

SCHRADER PACIFIC
Tire Hardware Solutions

PRP TUBE REPAIR PARTS

BOX OF PARTS

+25°C
+15°C

• Parts also recommended for RUN-FLAT Tires, as per manufacturer recommendations.

	61538-67	61539-67	61535-67	61536-67	61540-67	61541-67
	PRP 3	PRP 4,5	PRP 6		PRP 8	PRP 10
Ø pieces (mm)	3	4,5	6		8	10
Quantity per box	40	40	24	48	12	10
	3 years after date of manufacture					

REPAIR KITS

MICHELIN

Tool for roller R-5028-1
Spherical rasp S-4394-1

S-4252-8 Mini kit	S-4958-8 Kit
24 PRP Ø 6 mm Solution: 1 tube of 100 ml 1 Angular milling cutter Ø 6 mm	40 PRP Ø 3 mm 24 PRP Ø 6 mm Solution: 2 tubes of 100 ml 1 year angular milling cutter Ø 3 mm 1 year angular milling cutter Ø 6 mm 1 spherical rap (S-4394-1) 1 stitcher roller (R-5028-1)

S-4948-1 (*) S-4948-0 (**)
SAPHIR 100 ml vulcanizing solution tube for repair kits
Packaging: 1 (*) Packaging: 25 (**)
2 years
+25°C +15°C MICHELIN

TRP TIRE REPAIR PLUGS FOR RADIAL AND BIAS TIRES

- Remove the blue protection strip from the part before placing it.
- Use the OPALE cold solution.
- Use air buffer maxi speed 1200 rev/min page 141

+30°C
+15°C

Expiry date TRP: 3 years after date of manufacture.

	For hole (Ø mm)	Plug (Ø mm)	Quantity
66350-67	6	7	20
66351-67	8	10	20
66352-67	10	11	20
66353-67	13	17	20

For complete and perfect sealing, select TRPs

- Radial and bias tire tread repairs.
- Shoulder and sidewall repairs possible in some cases. Comply with local laws, which can be different in each country.
- If the angle of the injury is over 25º, make a two-part repair.
- TRP are covered with self-vulcanizing gum.
- Reinforce the repair using a PRF or a patch (two-part repair).
- The TRP's diameter is larger than the hole's, allowing compression, which guarantees a durable repair.
- Refer to the repair tables for the PRF or patches used

JIG REPAIR

	Description
95011-FF	Jig repair for PRP and TRP French
95038-FF	Jig repair for PRP and TRP English

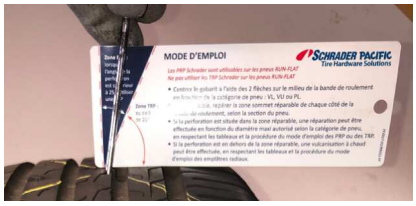

Training :
TIRE REPAIR PASSENGER CARS & TRUCKS & EARTHMOVER

Who is concerned :
Each person working as a tire dealer or in a passenger car tire workshop who needs to have a detailed knowledge about tire repair methods.

Please contact our sales team for subscription

Target:
- Knowledge of cold and hot repair on passenger cars and truck tires
- Acquiring of methods allowing different tire repairs ; knowledge of material to use

Target:
- Knowledge of hot repair on truck, agricultural and EM tires
- Acquiring of methods allowing different tire repairs
- Knowledge and definition of material to use
- Acquiring of autonomy in repair globally

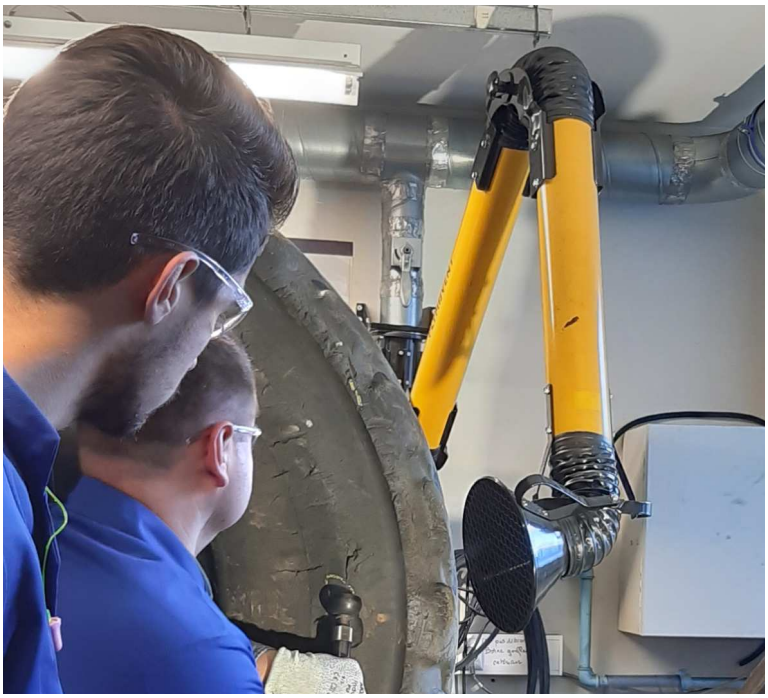

INNER TUBE REPAIR PATCHES (IRP)

• Once the repair is finished, sprinkle the part with talc to prevent the IRP from adhering to the inner tube (see talc on page page 125).

+30°C
+15°C

Expiry date : 5 years after date of manufacture

	Dimensions of parts	Quantity per box					
			Round parts				
66260-67	Ø 25	100	X				
66261-67	Ø 30	100		X	X		
66262-67	Ø 34	30		X	X		
66263-67	Ø 43	30		X	X		
66264-67	Ø 50	30			X	X	X
66265-67	Ø 80	30			X	X	X
66266-67	Ø 94	10				X	X
66267-67	Ø 116	10				X	X
			Oval parts				
66269-67	74 x 37	30		X	X		
66270-67	90 x 47	30		X	X		
66271-67	147 x 79	10				X	X
66272-67	186 x 94	10				X	X

• Cold : use **QUARTZ** vulcanizing solution.
• Detailed instructions provided inside each box.

Select the repair part according to the size of the damage on the inner tube.

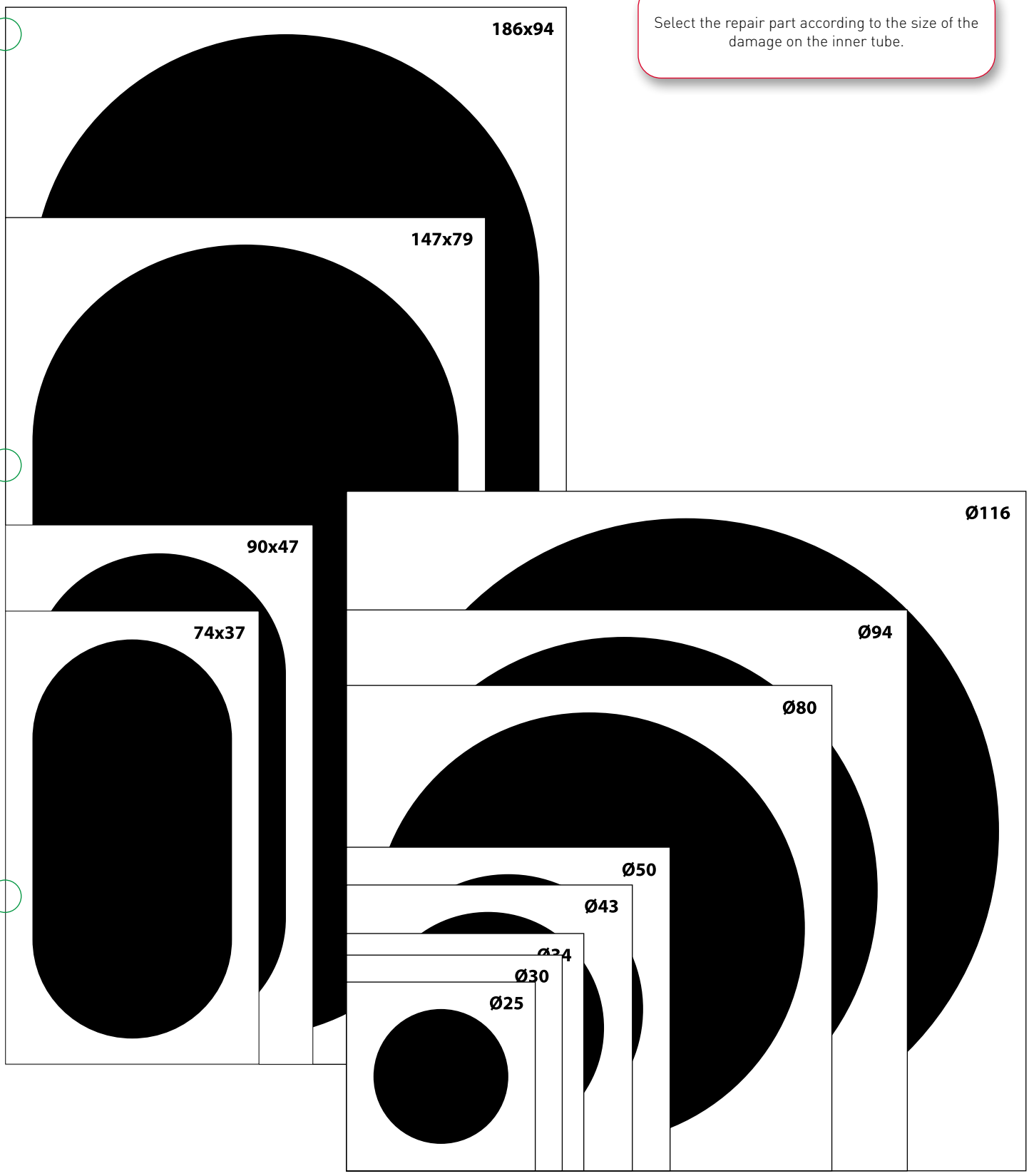

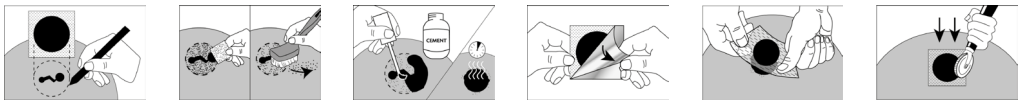

PRF COLD REPAIR FOR RADIAL AND BIAS TIRES

+25°C
+15°C

Expiry date : 5 years after date of manufacture.

	Dimensions of parts (mm)	Quantity per box
66200-67	Ø 35	100
66201-67	Ø 35	500
66202-67	Ø 50	100
66203-67	45 x 45	50
66204-67	45 x 45	500
66205-67	60 x 60	50
66206-67	60 x 60	500
66207-67	69 x 69	50

- Tread repairs only.
- Use **JADE** chemical vulcanizing solution.
- Speed code restrictions : comply with local laws that can be different in each country.

SCHRADER PACIFIC
Tire Hardware Solutions

S.R. PATCHES FOR RADIAL TIRES

- For cold or hot vulcanization.
- For tread, shoulder and sidewall injuries : centre of injury = centre of patch.
- <=>The direction of the arrow printed on the patch indicates the radial bead to bead direction.

+30°C
+15°C

Expiry date: 5 years after date on the packaging.

	Description	Dimensions of parts W. x L	Number of plies	Quantity per box					
66220-67	SR110	65x90	1	20	X	X	X		
66221-67	SR112	70x115	1	10	X	X	X	X	
66222-67	SR114	75x145	1	10	X				
66223-67	SR115	75x90	1	20			X	X	
66224-67	SR120	75x125	2	10		X	X	X	
66225-67	SR122	75x165	2	10		X	X	X	
66226-67	SR124	75x215	2	10		X	X		
66227-67	SR125	100x125	3	10		X	X		
66230-67	SR135	125x170	4	10			X		
66231-67	SR140	100x200	3	10		X	X		
66232-67	SR142	125x250	4	5			X		X
66233-67	SR144	125x330	4	5			X		X
66234-67	SR145	195x230	4	5					X
66235-67	SR180	150x195	2	5				X	
66236-67	SR182	190x250	3	5				X	
66237-67	SR184	215x290	3	5				X	
66238-67	SR186	245x340	3	5				X	
66239-67	SR146	140x405	4	5			X		X
66240-67	SR150	190x500	5	3					X
66241-67	SR152	250x570	5	3					X
66242-67	SR155	260x330	5	3					X
66243-67	SR156	255x755	7	3					X
66245-67	SR162	325x1030	7	1					X
66246-67	SR165	330x420	6	3					X
66247-67	SR168	345x760	7	3					X
66248-67	SR175	450x535	8	1					X
66249-67	SR185	530x730	8	1					X

- Parts also recommended for RUNFLAT Tires
  - Cold : use **JADE** vulcanizing solution.
  - Hot : use the **BLACK CEMENT** solution.
- Detailed instructions provided inside each box.

S.R.R. RETREAD PATCHES FOR RADIAL TIRES

- For cold or hot vulcanization.
- For tread, shoulder and sidewall injuries : centre of injury = centre of patch.
- <=>The direction of the arrow printed on the patch indicates the radial bead to bead direction.

+30°C
+15°C

Expiry date of patchs: 2 years after date on the packaging.

	Description	Dimensions of parts W. x L.	Quantity per box				
66330-67	SRR01	65	50	X	X	X	
66331-67	SRR10	65x80	10		X	X	
66332-67	SRR12	70x115	10		X	X	X
66334-67	SRR20	75x125	10		X	X	X
66335-67	SRR22	75x165	10		X	X	X
66336-67	SRR24	75x215	10		X	X	
66338-67	SRR33	100x125	10		X	X	
66339-67	SRR35	125x150	10			X	
66340-67	SRR37	125x170	5			X	
66341-67	SRR40	100x200	10		X	X	X
66342-67	SRR40A	100x200	10		X	X	
66343-67	SRR42	125x250	5			X	
66344-67	SRR42A	125x250	5			X	
66345-67	SRR44	125x330	5			X	
66346-67	SRR44A	125x330	5			X	
66365-67	SRR80	150x195	5				X
66362-67	SRR82	190x250	5				X

A : Aramid

- Cold : use **JADE** vulcanizing solution.
- Hot : use the **BLACK CEMENT** solution.
- Detailed instructions provided inside each box.

SCHRADER PACIFIC
Tire Hardware Solutions

S.D. PATCHES FOR BIAS TIRES

- For cold or hot vulcanization.
- For tread, shoulder and sidewall injuries : centre of injury = centre of patch.
- <=>The direction of the arrow printed on the patch indicates the radial bead to bead direction.

+30°C
+15°C

Expiry date: 5 years after date on the packaging.

	Description	Dimensions of parts W. x L.	Number of plies	Quantity per box					
66282-67	SD3	100x100	2	10	X	X	X	X	X
66283-67	SD4	130x130	4	10	X	X	X	X	X
66284-67	SD5	165x165	4	10	X	X	X	X	X
66286-67	SD6	240x240	6	5	X	X	X	X	X
66288-67	SD7	290x290	6	5	X	X	X	X	X

- Cold : use **JADE** vulcanizing solution.
- Hot : use the **BLACK CEMENT** solution.
- Detailed instructions provided inside each box.

REPAIR

SOLUTIONS

61429-67	61431-67	61426-67	61425-67
JADE vulcanizing solution	QUARTZ Vulcanizing solution	Hot solution BLACK CEMENT FLUID	Hot solution BLACK CEMENT FLUID
2 years	2,5 years	3 years	
235 ml brush	235 ml brush	945 ml brush	3,8 L
+30°C +15°C			

BUFFING SOLUTION

61427-67 61427-68	61432-67	61511-67
Buffing solution	Buffing solution	Buffing solution spray
5 years		4 years
945 ml	3,8 L	400 ml
+25°C +15°C		

FINISHING PRODUCT

61430-67
Linerseal Coating
1 year
235 ml brush
+30°C +15°C

INNER TUBE REPAIR PATCHES (IRP)

BOX OF PARTS

• Once the repair is finished, sprinkle the part with talc to prevent the IRP from adhering to the inner tube (see talc on page "Talc (shaker)", page 125).

+25°C
+15°C

Expiry date : 5 years after date of manufacture.

	Dimensions of parts (mm)	Quantity per box					
	Rounded patches						
60500-67	Ø 25	100	•				
60501-67	Ø 30	100		•	•		
60502-67	Ø 37	30		•	•		
60503-67	Ø 45	30		•	•		
60504-67	Ø 54	30			•	•	•
60505-67	Ø 75	30				•	•
60506-67	Ø 94	10				•	•
60507-67	Ø 116	10				•	•
	Oval patches						
60509-67	74 x 37	30		•	•		
60511-67	150 x 75	10				•	•

• Cold : use **TOPAZE** vulcanizing solution.

Choose the repair part according to the size of the injury on the tube.

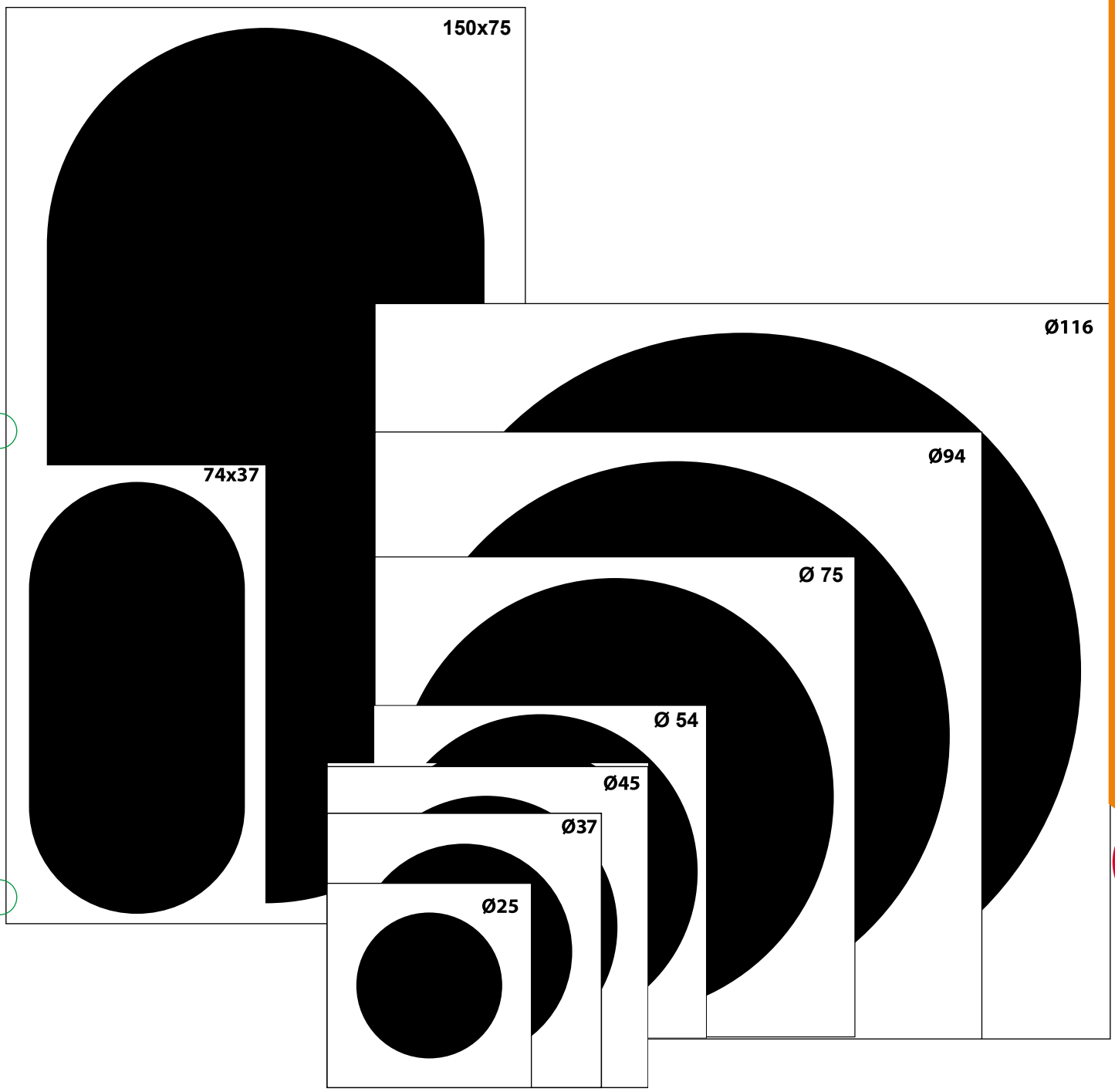

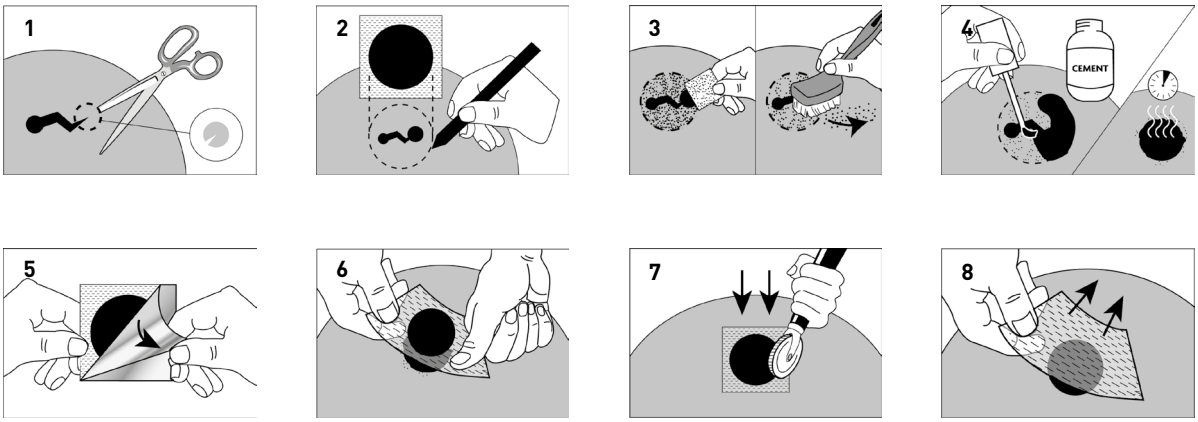

PRF COLD REPAIR FOR RADIAL AND BIAS TIRES

BOX OF PARTS

+25°C
+15°C

Expiry date: 5 years after date of manufacture.

	Dimensions of parts (mm)	Quantity per box
60700-67	Ø 35	100
60701-67	Ø 45	50
60702-67	Ø 60	50
60703-67	Ø 67	50
60704-67	Ø 35	500
60705-67	Ø 45	500
60706-67	Ø 60	500

• Tread repairs only.
• Use **OPALE** chemical vulcanizing solution.
• Speed code restrictions : comply with local laws that can be different in each country

SCHRAD & SCHRAD + PATCHES FOR RADIAL TIRES

- For cold or hot vulcanization.
- For tread, shoulder and sidewall injuries: centre of injury = centre of patch.
- <=>The direction of the arrow printed on the patch indicates the radial bead to bead direction.

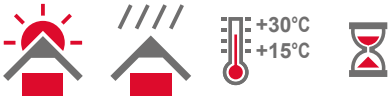

Expiry date : 5 years after the packing date.

	Description	Dimensions of parts (mm) W. x L.	Number of plies	Quantity per box					
60600-67	110	55x75	1	20	X	X			
60601-67	112	70x115	1	10	X	X			
60602-67	114	85x130	1	10	X				
60603-67	115	75x90	1	20			X	X	
60632-67	116	67x104	1	10			X	X	
60604-67	120	80x125	2	10		X	X	X	
60605-67	122	75x175	2	10		X	X	X	
60606-67	124	75x220	2	10		X	X		
60607-67	125	115x125	3	10		X	X		
60611-67	140	100x195	3	10			X	X	
60612-67	142	130x260	3	10			X		
60633-67	135	148x203	4	10			X		
60613-67	144	130x335	4	10			X		X
60615-67	180	150x190	2	5				X	
60616-67	182	185x240	3	5				X	
60617-67	184	215x295	3	5				X	
60618-67	186	245x340	2	5				X	
60619-67	146	180x440	4	5			X		X
60620-67	150	180x580	5	5					X
60621-67	152	240x580	5	3					X
60622-67	155	260x330	5	3					X
60623-67	156	270x720	7	3					X
60624-67	160	270x860	7	3				X	X
60625-67	162	325x1030	7	1					X
60626-67	165	330x420	6	3					X
60627-67	168	350x760	7	1					X
60628-67	175	450x530	8	3					X
60630-67	188	280x480	2	3				X	
60631-67	190	310x550	2	3				X	

- Parts also recommended for RUNFLAT tires (according to recommendations in table).
- Use the **OPALE** vulcanizing solution.
- Hot : use the **BLACK CEMENT** solution.
- Detailed instructions provided inside each box.
- See REP marking page 161.

SCHRAD + PATCHES FOR RADIAL TIRES

- For cold or hot vulcanization.
- For tread, shoulder and sidewall injuries: centre of injury = centre of patch.
- <=>The direction of the arrow printed on the patch indicates the radial bead to bead direction.

+30°C
+15°C

Expiry date : 5 years after the packing date.

	Description	Dimensions of parts (mm) W. x L.	Number of plies	Quantity per box		
61420-67	581 Aramid	155x195	1	5	X	X
61421-67	583 Aramid	190x245	1	5	X	X
61422-67	585 Aramid	220x350	1	5	X	X
61423-67	587 Aramid	280x450	1	5	X	X
61424-67	589 Aramid	330x590	1	3	X	X

- Parts also recommended for RUNFLAT tires (according to recommendations in table).
- Use the **OPALE** vulcanizing solution.
- Hot: use the **BLACK CEMENT** solution.
- Detailed instructions provided inside each box.
- See REP marking page 161.

SCHRADER PACIFIC
Tire Hardware Solutions

SDO+ PATCHES FOR BIAS TIRES

• Sidewall, shoulder and tread punctures : centre of the puncture = centre of the patch
• <=>The direction of the arrow printed on the patch indicates the radial direction from bead to bead.

+30°C
+15°C

Expiry date : 5 years after date on the packaging.

	Description	Dimensions of parts (mm) W. x L.	Number of plies	Quantity per box					
60651-67	SDO+03	100x100	2	10	X	X	X		
60652-67	SDO+04	120x120	2	10	X	X	X		
60653-67	SDO+05	160x160	4	10	X	X	X		
60655-67	SDO+06	240x240	6	10	X	X	X		
60657-67	SDO+07	295x295	6	10	X	X	X		
60659-67	SDO+08	345x345	6	5	X	X	X		
60665-67	SDO+020	255x255	4	10				X	
60666-67	SDO+021	370x370	4	5				X	
60667-67	SDO+022	510x510	4	3				X	
60668-67	SDO+023	255x255	6	10				X	
60669-67	SDO+024	370x370	6	5				X	
60670-67	SDO+025	510x510	6	3				X	
60680-67	SDO+050	240x240	4	12					X
60681-67	SDO+050+	240x240	6	10					X
60682-67	SDO+052	360x360	6	12					X
60683-67	SDO+052+	360x360	8	10					X
60684-67	SDO+054	500x500	8	5					X
60685-67	SDO+054+	500x500	10	5					X
60686-67	SDO+056	660x660	10	5					X
60687-67	SDO+056+	660x660	12	5					X

• Cold: use the **OPALE** vulcanizing solution.
• Hot: use the **BLACK HOT II** solution.
• Detailed instructions provided inside each box.
• See REP marking page 161.

SOLUTIONS

FDS

60515-67	65941-67	60516-67
TOPAZE can of vulcanizing solution 250 ml	Set of 250 ml can TOPAZE vulcanizing solution 60515-67 + brush cap 60719-67	TOPAZE 720 ml can of vulcanizing solution
4 years		
+25°C +15°C		

60710-67	65613-67	60712-67
OPALE+ solution (18 to 150°C) (250 ml can), CFC-free	Set of OPALE+ solution 250 ml 60710-67 + brush 60719-67	OPALE+ solution (18 to 150°C) (720 ml can), CFC-free
4 years		
+30°C +15°C		

60730-67
ONYX finishing product/sealing of the repair perimeter 250 ml
15 months
+25°C +15°C

BRUSH CAPS

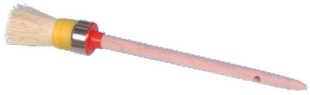

60719-67	60718-67	60717-67	67223-67
Brush cap for 250 ml can of OPALE, TOPAZE, ONYX	Brush cap for 720 ml can	Brush for 60718-67	Empty can + brush for vulcanization solution

CHEMICAL VULCANIZING SOLUTIONS

60518-67 60518-68	60519-67	60520-67
Chemical vulcanizing solution 800 ml	Chemical vulcanizing solution 5 L	Chemical vulcanizing solution spray 500 ml
Packaging: 1 (*) Packaging: 10 (**)		
5 years		3 years
+25°C +15°C		

TALC

61475-67
Talc (shaker)
640g
+25°C +15°C

GUMS

	60731-67
	Rubber A + B (2 boxes de 300 g)
	1 year
	2x300g
	-
	+25°C +15°C

	60732-67
	Self-vulcanizing bonding gum
	2 years
	5Kg
	ép.0,8 x l. 500 x L. 10000
	+30°C +15°C

FDS

61148-67
Steel-reinforced gum roll for hot vulcanization >100°C for use with Black Cement
thickness 1 x L. 850 x l. 100
+25°C +5°C

61149-67
Steel-reinforced gum roll for hot vulcanization >100°C for use with Black Cement
thickness 2.6 x L. 780 x l. 100
+25°C +5°C

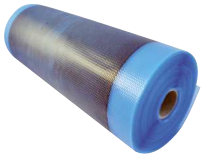

60733-67	60734-67	60736-67	60740-67 60741-67
Hot binding rubber	Hot sealing rubber	Hot cushion gum	Rope rubber Ø8 mm
1 year	1 year	-	-
5Kg	2,5Kg	1Kg	6Kg 12Kg
ép. 1 x l. 500 x L. 8000	ép. 1,2 x l. 250 x L. 7200	ép . 3 x l. 300	-
+30°C +15°C	+25°C +15°C	+25°C +15°C	+25°C +15°C

MATERIAL FOR RUBBERS

EXTRUDER GUNS

Delivered without compensator.

	67478-67	65761-67
Model	750 W	1600 W (special large EM)
Heating (V)	Electric 220V	Electric 220V
Heating power (W)	350	800
Motor	Pneumatic 6 bar	Electric 220V
Thermostat	0 to 120°C thermostat control	0 to 120°C thermostat control
Rubber Flow (kg/h)	18	40
Weight (Kg)	5	13

67504-67	67505-67	67503-67	67506-67
Thermostat	Nozzle with nut	Resistor	Worm screw

HOT PLATE

67479-67
Adjustable compensator

60880-67
Hot plate for uncured rubber, 230 V, 0.31 kW Dim: 205 x 515 mm Thermostat: 85°C

APPLICATION	DESIGNATION	TRP	IRP	IRP
Solution for cold repair	Quartz		■	■
	Jade	■		
Solution for hot repair	Black Cement			
Cleaning	Buffing solution	■	■	■
Finishing / sealing	Finishing product	■	■	■
Hot gum 70°C 110°C	Granite bonding and cushion gum			
Steel renforced gum	Steel-reinforced gum roll			
Cold tire damage repair	Topaze		■	■
	Opale	■		
Hot damage repair	Black Cement			
Cleaning	Râpeur chimique	■	■	■
Finishing / sealing	Onyx	■	■	■
Self vulcanizing cold gum	Bonding gum			
	A + B cushion gum			
Hot gum 100°C 160°C	Hot bonding gum			
	Roll of bonding gum			
	Rope rubber			

SCHRADER PACIFIC Tire Hardware Solutions

REPAIR PATCHES

	PRF	PRF	SR	SRR	Schrad	SD	SDO+	without patch
	■	■	■	■	■	■	■	
			■	■	■	■	■	■
	■	■	■	■	■	■	■	■
	■	■	■	■	■	■	■	
			■	■	■	■	■	■
			■	■	■	■	■	■
	■	■	■	■	■	■	■	
			■	■	■	■	■	
	■	■	■	■	■	■	■	■
	■	■	■	■	■	■	■	
			■	■	■	■	■	■
			■	■	■	■	■	■
			■	■	■	■	■	■
			■	■	■	■	■	■
			■	■	■	■	■	■

EMERGENCY REPAIR FROM THE OUTSIDE

INSERTS FOR RADIAL TIRES

- This type of repair is classified as an **EMERGENCY REPAIR ONLY**
- After use the vehicles can be driven at max. 50 MPH for max. 50 miles.
- The tire should then be examined by a specialist as soon as possible to assess its structure and make a permanent repair.
- Not for use in H, V or Z speed rated tires.
- For injuries up to 6 mm maximum.

MADE IN USA

Inserts are long-life products

	15-280	15-986-3M	15-281
Quantity per box	60	3000	30
Vehicle and tire type	Car radial tire		Trucks with radial tires
Lenght (mm)	100		200

INSERT KIT

Use the **OPALE** cold solution.

	65410-67
Kit contents	1 "T" insertion tool 15-227 1 "T" reamer tool 15-225 30 inserts, L = 100 mm 1 can of "OPALE" vulcanizing solution 250 mL.

INSERT TOOLS

15-224	15-225	15-227	15-231	15-230	15-232
Open Eye T-handle needle insert tool	Tire probe	Split-eye needle insert tool	Truck metal split-eye needle insert tool	Replacement needle for 15-231	Spiral grip cement needle tool

EMERGENCY REPAIR

AEROSOL TIRE INFLATORS

- Used for emergency repair of a tire with or without tube after puncture in the tire tread. Do not use for tire sidewall repairs.
- Repairs of punctures from the outside are only EMERGENCY REPAIRS.
- As soon as possible, have the tire dismounted by a professional for determination of the structural condition and definitive repair.
- **Do not use the preventive product if there is a pressure sensor in the tire.**

Long-life products

	A02299-67	A02299-12	A07193-67	A07193-12
Packaging	Aerosol 300 mL.		Aerosol 500 mL.	
Manual	Remove the object that caused the puncture. Shake the aerosol vigorously. In cold weather, warm the aerosol for a few minutes by holding in hands. With the inflation valve in "12 o'clock" position, screw the connector onto the valve. Hold the aerosol in vertical position and press the button until completely empty (around 1 minute). Immediately drive at moderate speed for at least 5 km for the plugging product to expand.			

RANGE slime

LIQUID SEALANT FOR EMERGENCY REPAIR

FDS

@ Further information :
www.slime.com

Fibro-Seal™

• The SLIME puncture preventative seals punctures:
- up to ø 3 mm maxi on tires with inner tubes
- up to ø 6 mm maxi on tubeless tires.
• SLIME seals punctures on the **TREAD AREA** of the tire.
The pressure of the escaping air forces the product into the opening and a plug is instantly formed.
• Liquid cleaned with water and non-toxic.
• Effective during the tire's entire lifetime.
• Used as a flat preventative, SLIME is effective up to 80 km/h.
• Used as an emergency repair after a puncture on the tread area of the tire, a speed of 80 km/h should not be exceeded and as soon as possible the wheel should be dismantled by a professional to assess its condition and make a definitive repair.
Do not use for repairs on the tire's sidewall.
• **Do not use the preventative if there is a pressure sensor in the tire.**
• Can be used from -30 to +80°C

Sold packaged by 6.

Expiry date: 5 years after date of manufacture. Product lifetime in the tire : 2 years.

S10015	S10016	SDS5006IN	S10031
For tubeless MOTORCYCLE tires 237 mL	For tubeless tires or spare product for SMART REPAIR 237 mL	UNIVERSAL For tubeless tires or spare product for SMART REPAIR kit - 473 mL	UNIVERSAL and OFF ROAD For tubeless tires 946 mL

Calculation simulator
available at:
www.slime.com

www.slime.com

SCHRADER PACIFIC
Tire Hardware Solutions

RANGE slime

FDS

PORTABLE KITS FOR EMERGENCY TIRE REPAIR AND INFLATION OF TUBELESS TIRES

Quick repair of a flat without removing wheel, no need to wait for assistance

@ further information :
www.slime.com

Fibro-Seal™

- SLIME prevents punctures of up to ø 6 mm maxi on tubeless tires.
- SLIME seals punctures on the **TREAD AREA** of the tire.

The pressure of the escaping air forces the product into the opening and a plug is instantly formed.

- Liquid cleaned with water and non-toxic.
- Effective during the tire's entire lifetime.
- Used as an emergency repair after a puncture on the tread area of the tire, a speed of 80 km/h should not be exceeded and as soon as possible the wheel should be dismantled by a professional to assess its condition
- The tire should be examined by a specialist as soon as possible to assess its structure and make a definitive repair. Do not use for repairs on the tire's sidewall.
- **If the tire is equipped with a pressure sensor, Schrader Pacific Tire Hardware Solutions recommends it be immediately replaced.**
- Can be used from -30 to +80ºC

Shelf life : 5 years, lifespan of product in tire : 2 years.

CRK0305IN
SMART REPAIR kit Contents : - 1 can 473 mL of liquid sealant ref. SDS-500-IN - 1 compressor 12 V - 1 rigid storage case - Accessories Dimensions : 22 x 8 x 17 cm Weight : 1.4 kg
Spare can for compressor Safety 473 mL Ref. SDS50030IN

**Slim : trademark*

TIRE PUNCTURE PREVENTION

SLIME® RANGE

FDS

www

Find out more at :
www.slime.com

Fibro-Seal™

- The SLIME® puncture prevention product seals punctures :
  - up to a max Ø 3 mm on tires with inner tubes
  - up to a max Ø 6 mm on tubeless tires
- SLIME® fills the punctures on the tire **TREAD** zone.
  The pressure of the escaping air pushes the product into the perforation, immediately creating a seal.
- Non-toxic liquid, water soluble
- Effective for the entire lifespan of the tire.
- Used for prevention, SLIME® is effective up to 80 km/h.
- When used as an emergency repair after puncture of the tread zone, it is best not to exceed 80 km/h and to have the tire dismounted by a professional as soon as possible, for determination of the condition of the structure and definitive repair.
  Do not use for tire sidewall repairs.
- **Do not use the preventive product if there is a pressure sensor in the tire.**
- Operating temperature from -30 to +80°C.

	SDSB5GIN
Description	Preventive product for tubeless tires up to 80 km/h
Contents	18.9L
Weight	22 Kg
Dimensions	29.5 x 29.5 x 35.5 cm
Use	
Precautions	FDS

	SBAP
Description	Pump for jug SDSB5GIN **Capacity Pump 235 ml** The pump can be pre-set according to the quantity of product to be inserted in the tire.
Weight	1.3 Kg
Dimensions	64 x 8 x 14 cm

www.slime.com

Calculation simulator available at:
www.slime.com

SCHRADER PACIFIC Tire Hardware Solutions

TIRE PUNCTURE PREVENTION

FDS

- The tire puncture prevention product fills in small perforations during use on small tires on micro-tractors, mowers, golf carts, trailers, etc.
- The product must be shaken before use.

Expiry date : 2 years.

	65468-67
Description	For small tires (can be used for puncture prevention up to 40 km/h)
Contents	30 L
Weight	31 Kg
Use	
Precautions	FDS

	65472-67	65470-67
Description	Hand pump for jug 65468-67 One pump = 100 ml of product.	Pump valve adaptor
Weight	1.1Kg	

When repairing, we recommend wearing helmet, glasses,
protective gloves, safety boots and ear protection
• Follow the instructions for use

REPAIR TOOLS AND VULCANIZATION EQUIPMENT

A large range.

Schrader Pacific Tire Hardware Solutions offers a range of equipment for professionals to meet their customers' requirements and to train and provide turnkey solutions for repair specialists, industry, public works and mining... , depending on the tire to be repaired, up to 63" and the type of repair, puncture or injury.

Technical training.

Staff concerned:
Any person working in a position within a tire company or independent repair shop requiring in-depth knowledge of repair and associated methods.

Level 1, tire repair, objective :
• Knowledge of cold and hot tire vulcanization repair methods.
• Learning of methods used to repair different types of tires ; knowledge of which materials to use.
• Simulations in our training centres.

To register,
contact our sales team.

FORMATION :
Schrader Pacific Tire Hardware Solutions provides trainings on repair products.

REPAIR TOOLS AND VULCANIZING EQUIPMENT

- Technical support and training ..... 138 - 145
- Pneumatic air buffers, connectors and adaptors ..... 146 - 147
- Skiving tools and accessories. 148
- Electric brushes and accessories. ..... 149 - 152
- Brush tools 153
- Vacuum cleaners. 154
- Tire spreader, cart. 155
- Pneumatic hammers and vacuum cleaners. 156-157
- Small hand tools. ..... 158 - 159
- Tire markers ..... 160 - 161
- Vulcanizeurs components ..... 162 - 167
  VSM 150, VSM 200
- Vulcanizing machine 168
- Support-lifts and spreaders. 169

FIXTURES RECOMMENDED FOR WORKING WITH GUM

Brushing, skiving and cleaning
S-4370-1 **S-4979-1**

Crater rasping on tire tread		External crater rasping and internal rasping for butyl		Cutting of external rubber	
67640-67 (*) **67639-67 (*)**	**60373-67** **60374-67**	**67620-67** **S-4374-1** **67621-67**	**60349-67** **60350-67** **60355-67** **60356-67** **60358-67** **60359-67**	**60339-67** **60340-67** **60341-67**	**60882-67** **60883-67 (*)**

Rasping between studs with tall height	External crater rasping and internal rasping for butyl	
66687-67 (*)	**S-4312-1 (*)** **67622-67 (*)** **67623-67 (*)** **67624-67 (*)** **67625-67 (*)**	**60342-67 (*)** **60343-67 (*)** **60344-67 (*)** **60345-67 (*)** **60346-67 (*)** **60347-67 (*)**

External crater rasping and internal rasping for butyl	
67620-67 **S-4374-1** **67621-67**	**60339-67** **60340-67** **60341-67**

(*) adaptable tooling, but not recommended for grinders.

SCHRADER PACIFIC
Tire Hardware Solutions

MECHANICAL AND AUTOMATIC CHUCKS FOR FITTINGS WITH 6 MM/8 MM STEM

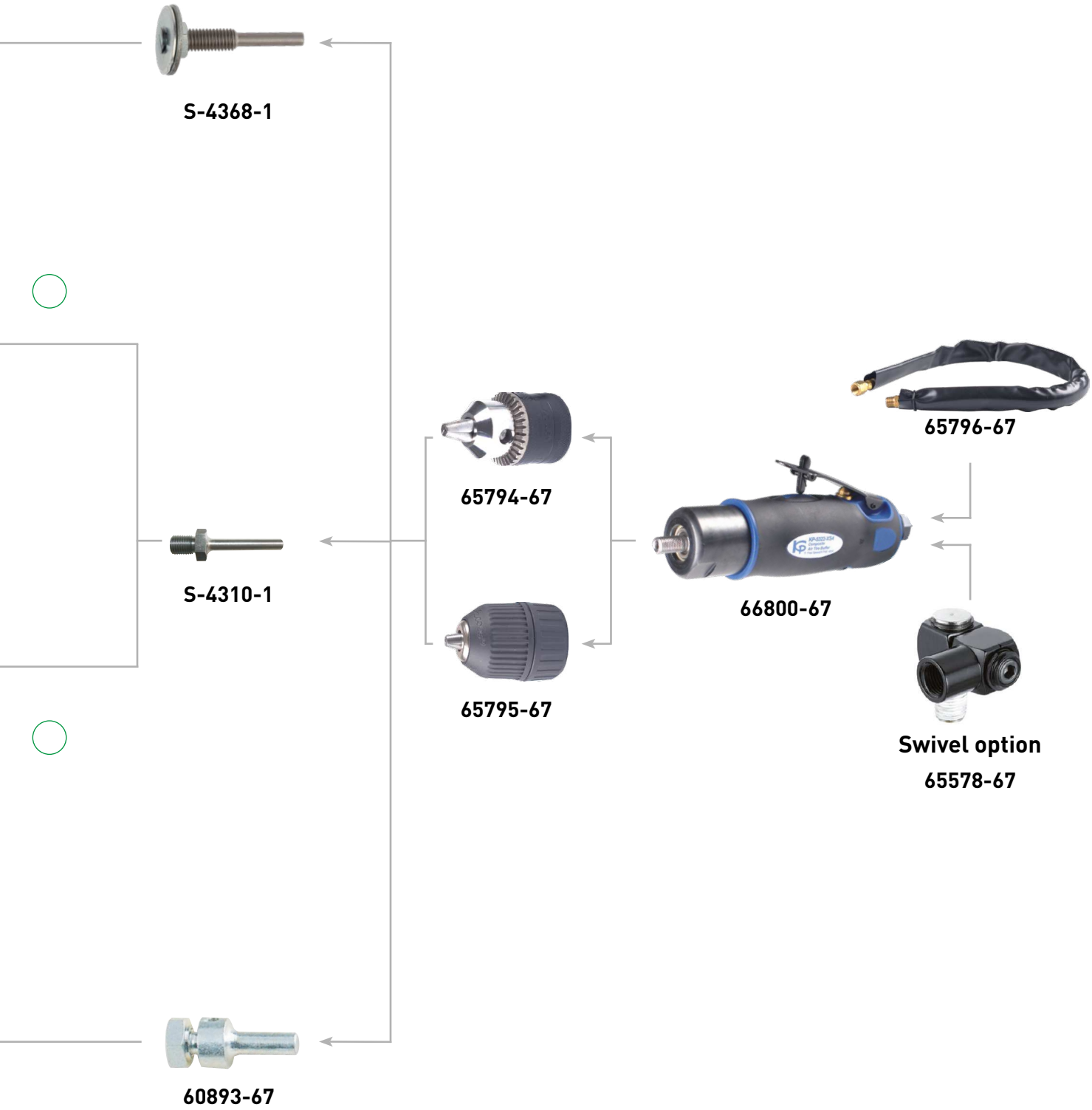

FIXTURES RECOMMENDED FOR WORKING WITH GUM

Brushing, skiving and cleaning
S-4370-1 **S-4979-1**

Crater rasping on tire tread		External crater rasping and internal rasping for butyl		Cutting of external rubber	
67640-67 (*) **67639-67 (*)**	**60373-67** **60374-67**	**67620-67** **S-4374-1** **67621-67**	**60349-67** **60350-67** **60355-67** **60356-67** **60358-67** **60359-67**	**60339-67** **60340-67** **60341-67**	**60882-67** **60883-67 (*)**

Rasping between studs with tall height	External crater rasping and internal rasping for butyl	
66687-67 (*)	**S-4312-1 (*)** **67622-67 (*)** **67623-67 (*)** **67624-67 (*)** **67625-67 (*)**	**60342-67 (*)** **60343-67 (*)** **60344-67 (*)** **60345-67 (*)** **60346-67 (*)** **60347-67 (*)**

Brushing, skiving and cleaning	
S-4369-1 (*)	**S-4306-1 (*)** **S-4340-1 (*)**

(*) adaptable tooling, but not recommended for grinders.

SCHRADER PACIFIC
Tire Hardware Solutions

QUICK CHANGE CHUCK FOR HEX SHANK 11 MM

65310-67

65309-67

65311-67

65312-67

65307-67

61364-67

65796-67

66800-67

Swivel option

65578-67

FIXTURES RECOMMENDED FOR WORKING WITH GUM

61143-67	**61144-67**	**61145-67**

Finishing rollers

S-4789-1 **65851-67**	**60887-67** **60888-67** **60889-67**

External crater rasping and internal rasping for butyl

67649-67

Brushing, skiving and cleaning

66124-67 **66125-67**	**60884-67**	**60885-67**

Crater rasping on tire tread and sidewall

66689-67 **66688-67**	**60382-67** **60383-67**	**60376-67** **60377-67**	**60379-67** **60380-67**

SCHRADER PACIFIC
Tire Hardware Solutions

QUICK CHANGE CHUCK FOR HEX SHANK 11 MM

61146-67

61364-67

65308-67

65796-67

65794-67

66800-67

65795-67

65578-67

Swivel option

FIXTURES RECOMMENDED FOR WORKING ON STEEL

Cable stop machining on sidewall for small damage	
61139-67	**61137-67**

Cable stop machining on sidewall for significant damage or damage to tire tread
61140-67

61138-67

Crater rasping on tire tread and sidewall
66962-67

SCHRADER PACIFIC
Tire Hardware Solutions

COLLET CHUCK Ø6

65796-67

66801-67

Swivel option

65578-67

67251-67

S-4368-1

AIR GRINDERS

WORKING ON STEEL CABLES

WORKING ON RUBBER

	66801-67	66799-67	66800-67
T/min.	22 000	800	4000
Power	253 watt (0.39hp)	335.56 watt (0.45 hp)	291 watt (0.39 hp)
Output shaft threading	3/8" with 6 collet included	3/8"	3/8"
Air consumption (L/min)	133	119	142
Sound level db(A)	103	95	101
Dimensions (mm)	L.175 x ø 50	L. 200 x l. 150 x ø 45	L. 248 x ø 50
Air inlet	F -G 1/4	F -G 1/4	F -G 1/4
Weight (kg)	0.6	1.34	1.06
		Recommended for installation of TRP.	Chucks ordered separately

- Operating pressure 6.5 bar. Supply with filtered, lubricated air.
- Follow the recommendations in the instructions for use.

Connect a quick connector 65088-67 to the hose.

65796-67	65578-67	S 4788-1
Supply and exhaust kit for grinder 66800-67, L = 74 cm	Bi-directional connection 360°. Keeps the hose straight without any stresses. Improves handling and use of pneumatic tools or inflator gauges. Inlet: G 1/4 Female Outlet: G 1/4 male Flowrate: 0 to 45 m3/h at 7 bar	Spare 6 mm collet with wrenches for grinder 66801-67

SCHRADER PACIFIC Tire Hardware Solutions

CHUCKS AND TOOL HOLDERS

CHUCKS

65307-67	65131-67	65794-67	65795-67
For 66800-67 female quick-connect chuck 3/8" x 24 (hex.11 mm) UNF For air grinder 4,000 rpm max	Chuck wrench, 10 mm (spare part for 65794-67)	For 66800-67 Chuck with wrench, 10 mm	For 66800-67 Automatic chuck 10 mm

TOOL HOLDER CHUCK 10 MM

	S 4310-1	60895-67	60893-67
Tapping	3/8"	M14	3/8"
Tige (mm)	6	8	8
Accessories		With 1 nut	With 1 collet nut

FEMALE TOOL HOLDER

	65446-67	65818-67	65308-67	65447-67	65448-67
Shaft (mm)	3	4.5	6	8	10
Accessories	With Allen wrench	With Allen wrench	With Allen wrench	With Allen wrench	With Allen wrench
Intended use	For tools with Ø 3 mm	For tools with Ø 4.5 mm	For tools with Ø 6 mm	For tools with Ø 8 mm	For tools with Ø 10 mm

MALE TOOL HOLDER

	65309-67	65310-67	65311-67	65312-67
Threading	3/8" x 24 UNF	3/8" x 24 UNF	M14	M14
Offset (mm)	16	24	12	31
Accessories	With 1 nut	With 2 nuts	With 1 nut	With 1 nut

ELECTRICAL BRUSH AND ACCESSORIES

- Powerful, with high torque and adapted speed, avoids burning the rubber.
- Follow the recommendations in the instructions for use.

The interior of the brushes must be greased at least once a year

FDS

	61364-67	61359-67	61360-67	65607-67
Description	Electrical brush, single speed 3,000 rpm, on cart with 4 wheels with flexible hose Ø 10	Flexible sheath	Flexible drive shaft Ø10	Grease cartridge for brush interior
Power	380 V, 750 W	-	-	
Dimensions (cm)	100x77x77	200	± 200	
Weight (kg)	50	2.75	0.90	

TOOL HOLDER FOR BRUSHES

65307-67

	61146-67
Hex (11 mm)	13 x 20

TOOL HOLDER WITH FLANGES

65794-67

65795-67

	67251-67	S-4368-1
Ø Thread (mm)	6	6
Ø thread length (mm)	10	10
Accessories	With 1 nut and 2 washers	With 1 nut and 2 washers

SCHRADER PACIFIC
Tire Hardware Solutions

RASPS AND TOOLS FOR RUBBER

1/2 SPHERICAL RASPS

- Rasps are recommended for rubber buffing and skiving.
- Speed: between 1400 and 4500 rpm.
- When using this equipment, we recommend that you wear protective goggles and gloves as well as our 61350-67 sleeve.

	60339-67	60340-67	60341-67	60342-67	60343-67	60344-67	60345-67	60346-67	60347-67
Grit	GF	GM	TGG	GF	GM	TGG	GF	GM	TGG
Ø (mm)	50	50	50	76	76	76	102	102	102
Width (mm)	25	25	25	32	32	32	38	38	38
Tapping	3/8'' x 24 UNF	3/8'' x 24 UNF	3/8'' x 24 UNF	Ø 14	Ø 14	Ø 14	Ø 14	Ø 14	Ø 14

HQ ★★★★

	67620-67	S-4374-1	67621-67	S-4312-1	67622-67	67623-67	67624-67	67625-67
Grit	TGG	GM	GF	TGG	GM	GF	TGG	GM
Ø (mm)	50	50	50	76	76	76	102	102
Width (mm)	25	25	25	32	32	32	38	38
Tapping	3/8'' x 24 UNF	3/8'' x 24 UNF	3/8'' x 24 UNF	Ø 14	Ø 14	Ø 14	Ø 14	Ø 14

Grit types:	Fine grit (GF) 60 or 170	Medium grit (GM) 36 or 230	Large grit (GG) 24 or 330	Very large grit (TGG) 16 or 390

SKIVING TOOLS AND ACCESSORIES FOR RUBBER

INTENSIVE USE

REFERENCES WITH "INTENSIVE USE" MARKING
Tungsten carbide rasps with even teeth. They are made up of a sheet metal holder electronically coated with a number of steel beads (depending on the grain size). These beads themselves are covered with a "conical head" made of tungsten carbide, using the same process. Even and smooth teeth provide more consistent shaping, better ventilation, heating the rubber less and releasing less smoke.

ROUND RASPS

	60349-67	60350-67	60355-67	60356-67	60358-67	60359-67	60360-67
Grit	GM	TGG	GM	TGG	GM	TGG	GF
Ø (mm)	50	50	50	50	50	50	50
Width (mm)	3.5	5	7	10	10	13	13
Tapping	3/8'' x 24 UNF	3/8'' x 24 UNF	3/8'' x 24 UNF	3/8'' x 24 UNF	3/8'' x 24 UNF	3/8'' x 24 UNF	3/8'' x 24 UNF

	66687-67
Grit	GM
Ø (mm)	108
Width (mm)	10
Ø hole (mm)	14

CONICAL RASPS

	67639-67	67640-67	60373-67	60374-67
Grit	GM	TGG	GM	TGG
Ø (mm)	25	25	25	25
Width (mm)	102	102	102	102
Tapping	3/8'' X 24 UNF	3/8'' X 24 UNF	3/8'' x 24 UNF	3/8'' x 24 UNF

SCHRADER PACIFIC Tire Hardware Solutions

SKIVING TOOLS AND ACCESSORIES FOR RUBBER

- Rasps are recommended for rubber buffing and skiving.
- Speed : between 1400 and 4500 rpm.
- We advise you to wear protective goggles when using this material.

BALL RASPS

HQ ★★★★

	66688-67	66689-67	60382-67	60383-67
Grit	GM	TGG	GM	TGG
Ø (mm)	20	20	20	20
Ø stem (mm)	6	6	6	6

CERAMIC EMULSION CYLINDRICAL RASP

HQ ★★★★

	S-4394-1
Ø (mm)	40
Ø stem (mm)	6

- Cutter specially designed for rasping the tire before placing a PRP.
- Recommended speed: between 1400 and 4500 r.p.m.

PENCIL RASPS

	60376-67	60377-67	60379-67	60380-67
Grit	GM	TGG	GM	TGG
Ø (mm)	6	6	6	6
Length (mm)	65	65	102	102
Ø stem (mm)	6	6	6	6

ROUND RASP

HQ ★★★★

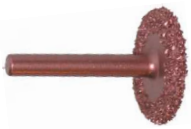

	67649-67
Grit	GG
Ø (mm)	30
Width (mm)	6
Ø stem (mm)	6

SKIVING TOOLS AND ACCESSORIES

MOUNTED BRUSHES WITH SHAFT

	60884-67	60885-67
Ø (mm)	55	60
Ep.(mm)	8	20
Ø Thread (mm)	6	6

PVC-COATED BRUSHES WITH STEEL CABLE

66124-67	66125-67
63	76
8	8
6	6

Use of these brushes limits projections.

CONICAL REAMER TOOLS

	S-4946-1	65580-67	S-4947-1	65581-67	S-4954-1	66360-67
Ø head (mm)	3	4,5	6	8	10	13
Ø rod (mm)	3	6	6	8	10	10
Ø hole (mm)	3	6	6	8	10	13 (TRP only)

CUTTERS FOR METAL

- Speed : maxi 25,000 rpm.
- Use cutter 66801-67 with a ø 6 mm stem (page 146).
- Use the stone for rubber tools P/N 60333-67.
- We advise you to wear protective goggles when using this equipment.

HQ ★★★★

	61137-67	61138-67	61139-67	61140-67
Grit	80	80	80	80
Type of cutter	Mushroom	Ball	Conical	Conical
Ø (mm)	40	20	25	65
Thickness (mm)	10	-	8	20
Ø Thread (mm)	6	6	6	6

SCHRADER PACIFIC Tire Hardware Solutions

FINISHING TOOLS

ABRASIVE DISCS

	S-4789-1	65851-67
Ø Thread (mm)	6	6
Width (mm)	15	30
Ø ext (mm)	60	60
Grit Ø	-	-
Description	-	-

ROLLERS AND EMERY RINGS

60887-67	60888-67	60889-67
6	6	6
30	30	30
45	45	45
60	60	40
Complete with 5 rings	1 bag only	1 bag only

- Finishing tools allow to remove the vulcanized rubber excess.
- Speed : between 1400 and 4500 rpm.
- We advise you to wear protective goggles when using this material.

SKIVING TOOLS AND ACCESSORIES

CUTTING WHEEL

HQ

Sold by 1	66962-67
Ø disc (mm)	50
Ø hole (mm)	6

GOUGES

	60882-67	60883-67
Tapping	3/8'' x 24 UNF	3/8'' x 24 UNF
Ø gouge (mm)	32	50
Quantity per box	set of 3	1

- Speed : between 1400 and 4500 rpm.

TOOLS FOR SHAFT MACHINES

BRUSHES FOR RUBBER

• Brushes are designed for brushing the rubber and cleaning skived areas or steel cables.
• Speed : between 1400 and 4500 rpm.

USE: adaptors for shaft machines 65312-67 (Hex. 11 mm)

	S-4370-1	S-4979-1	S-4792-1
Description	Set of 5 soft brushes	Set of 5 hard brushes	Set of flanges+1 washers
Ø (mm)	70	70	45
Thickness (mm)	15/100e	35/100e	-
Ø hole (mm)	10	10	10

	S-4306-1	S-4340-1	S-4369-1
Description	Set of 5 soft brushes for metal cables	Set of 5 hard brushes for rubber	Set of 2 plates
Ø (mm)	90	90	65
Thickness (mm)	15/100e	35/100e	68
Ø hole (mm)	14	14	14

RUBBERIZED BRUSHES

	61143-67	61144-67	61145-67
Ø (mm)	50	75	75
Thickness (mm)	6	6	12
Ø hole (mm)	12.7	12.7	12.7

Use the tool holder 61146-67

SCHRADER PACIFIC
Tire Hardware Solutions

VACUUM CLEANER

- Operating pressure: 7 bar.
- Supply with non-lubricated filtered air

	67215-67
Description	Vacuum cleaner 1100 W, 23 V, 180 m3/h, tank 15 l. (bagless) with accessories
Weight (kg)	9.3
Connection	Tapping G 1/4

	65192-67
Description	Pneumatic vacuum for dust and balancing beads. It is also very helpful to empty the water from weighted or stored tires during severe weather
Weight (kg)	1.2
Connection	G 1/4

SPREADERS, REPAIR TABLE

MECHANICAL TIRE SPREADER

	66810-67	66811-67
Manual tire spreader	Truck	EM
Max opening (mm)	300	870
Weight (kg)	2.3	5.1

REPAIR TABLE

This is an essential component for all truck or earthmover repair stations.
This highly mobile trolley (4 swivel wheels) accompanies the operator and ensures that all the necessary repair tools are within his reach.
Size: L 55 x W 55 x H 115 cm.
Weight: 35 kg

	67214-67
Description	Mobile cart on rollers L 55 x W 55 x H 115 cm.
Weight (kg)	35

	33705-67
Description	Tire spreader for workbench
Weight (kg)	3,5

LIFTER SPREADER SUPPORT 300 KG

- Lower position: Place the tire on the two rollers, install the claws, and spread the tire bars apart.
- Upper position: Use the control lever to raise the tire spreader assembly.
- Control station with tool shelf.

	61518-00	
Description	Type of tires : Heavy-duty tires, Off-road/agricultural/construction Controls : Pneumatic control levers Power type : Compressed air Air compressor required : Yes Load capacity : 120 kg Maximum lift height : 74 cm Tire capacity : 1 Maximum tire width : 45 cm Outer tire diameter : 120 cm Maximum air pressure input and output : 9.8 bar Certifications : CE Materials : Steel Product dimensions : 100x71x165 cm Weight : 127 kg Box dimensions : 124x82x77 cm Gross weight : 160 kg	Comes with a Euro profile connector. For France, order connector : 65088-67

SCHRADER PACIFIC Tire Hardware Solutions

PNEUMATIC HAMMERS AND OTR KNIFE

PNEUMATIC HAMMERS

- Operating pressure : 6-8 bar.
- Filtered and lubricated air supply (see page page 94).
- Connect a quick coupler 65088-67 onto the hammer.
- Compliant with Directive 2006/42/EC

	67231-67	66802-67
Description	Pneumatic hammer for flattening earthmover patches.	Pneumatic hammer for flattening truck, farm vehicle and earthmover patches.
Weight (kg)	1.8	3
Connection	G 1/4	Tapping G 1/4
	Sold without fittings	Sold without fittings but with two wrenches and one spare head

	66664-67	65984-67	66803-67
Spare parts	Head for 67231-67	Spring for 67231-67	Rubber spud for 66802-67

OTR KNIFE

Tool to remove butyl for construction machine repairs

The repair of OTR tires can be problematic for technicians in certain phases.
The preparation phase before repair (brushing) is long and tedious
for professionals, since it produces a lot of rubber dust.
This tool responds to the needs of professionals as well
as occupational health recommendations,
by reducing the brushing phase by 90%.

- Reduces the brushing phase by 90%
- Control of heating power
- Touch button on handle to start blade heating
- Sold with box of 10 blades, 20-28 mm (ref S-4730-1)
- Easy storage in plastic case

	61320-67
Cutting width	32 to 40 mm
Cutting depth	6 to 7 mm

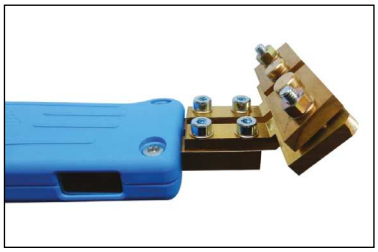

SMALL HAND TOOLS

KNIVES

	Description	Long blade (mm)
17-249	Curved knife	85
17-248	Knife with straight blade 10 cm	100
67227-67	Knife with ABS sleeve	160
67228-67	Knife with ABS sleeve	120
67229-67	Knife with ABS sleeve	280
60338-67	Stone for rubber tools 230 mm	

STITCHER ROLLERS AND PROBING AWL

	Description	Ø roller (mm)	Width (mm)
66383-67	Indicator of Ø for PRP and TRP, L = 215 mm		
R-5028-1	Stitcher roller	34	9
60881-67	Toothed fine stitcher	25	2
17-244	Toothed stitcher	38	2
17-245	Toothed stitcher	38	6
17-246	Toothed stitcher	50	6
61182-67	Steel roller	40	46
67225-67	Stitcher with points	50	40
67226-67	Box of 3000 points for stitcher 67225-67		

SCHRADER PACIFIC Tire Hardware Solutions

SMALL HAND TOOLS

PLIERS

	Description
65219-67	Folding wire cutter for steel cables
61483-67	Wire cutter for steel wires
67220-67	Pliers
65126-67	45° angled circlip pliers

BRUSHES, MALLET, RULE, SCREWDRIVER, SCISSORS, DEFACING TOOL

	Description	Length(mm)
67218-67	Rubber mallet	320
67222-67	Short shaft whisk broom	290
R-5027-1	Wire brush	190
65279-67	Steel convex brush	255
65812-67	Butyl Scraper	150
66085-67	Stainless steel straight brush 0.35, 4 rows, body in beech	310
60886-67	Scissors	Total : 200 Blades : 110
67233-67	Tool for removing the tire registration number (delivered with its blade)	
67234-67	Replacement blade	
60333-67	Carborundum grinding stone with handle 170 x 30 x 20 mm for cleaning metal skiving tools	

TIRE MARKERS

If the marker stays connected during pauses, it may overheat and be damaged.

	60235-67
Description	Tire marker power 300 W. Capacity 6 letters or numbers Height 12 mm + 1 screw stop on each side. Reaches operating temperature after 20 min.

UTILISATION INTENSIVE

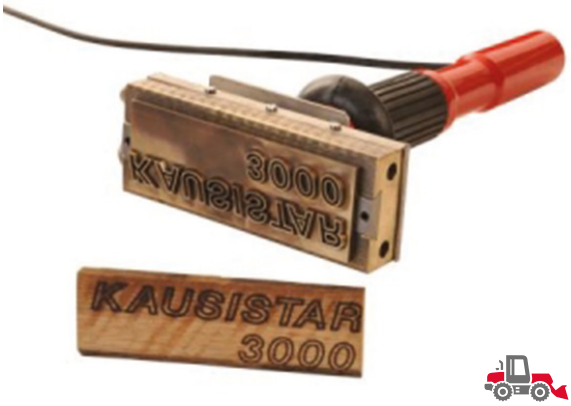

	60181-67	66969-67
Description	SUPER MARKER Fitted with 135 x 64 mm rectangular head with groove. Ready for use after 20 minutes. The following items may be inserted : - 15 separate figures or letters, height 10 mm - 10 separate figures or letters, height 20 mm - 1 personalised logo engraved on a removable plate	"KAUSISTAR 3000" MARKER Ready for use after 15 minutes. Engraving 175 x 64 mm. Cord lenght : 1,5m Power : Single-phase 230 volts with earthing Ultra-fast marking. Large groove for long engraving. 2 protected cartridges designed fir intensive use. On request.
Power	400 W	800 W
Possible engraving surface (mm)	135 x 64	157 x 67
W. (mm)	370	380
Weight (kg)	2	3,5

SCHRADER PACIFIC
Tire Hardware Solutions

TIRE MARKERS

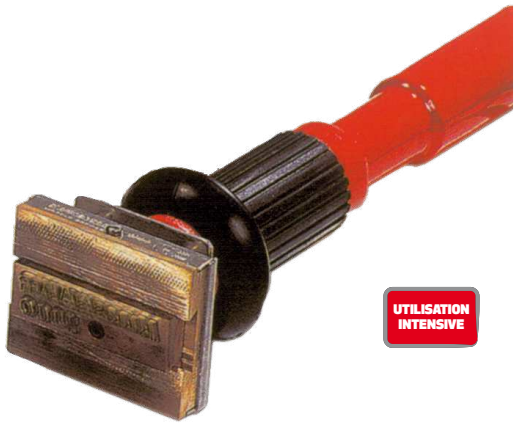

	67469-67
Description	"STANDARD" MARKER Fitted with 85 x 64 mm rectangular headwith groove. Ready for use after 15 minutes. The following items may be inserted : - 9 separate figures or letters, height 10 mm - 5 separate figures or letters, height 20 mm - 1 personalised logo engraved on removable plate
Power	200 W
Possible engraving area (mm)	85x64
Long. (mm)	370
Weight (kg)	1,5

• These electrically heated marking appliances are used for marking tires by burning at a temperature of approx. 350ºC.
• The following items may be placed in the groove of "Standard", "Super" appliances :
separate numbers or letters, or a text or logo on a removable plate.
• Power 230 V single phase with earth.

All letters and numbers available on request.

	Letter	Height (mm)
67471-1R	R	10
67471-1E	E	10
67471-1P	P	10

	Letter	Height (mm)
67472-2R	R	20
67472-2E	E	20
67472-2P	P	20

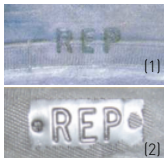

Extract from the «Tire repair Guide» printed by "Les professionnels du pneu"
"Tire repairs with patches and vulcanization in conformity with all repair process standards and control standards are marked with an indelible marking.
[1] A mark inside clearly identifying the repairer will be affixed to the repair itself.
This marking will include the first six numbers of the repairer's RC (starting form the left) or name.
[2] On the outside, a hot stamping will show "REP" on the fitting line vertical to the repair.

As of 1st January 2009, no more hot vulcanizing repairs on tire sidewalls can be made without the "REP" marking. Application for cars equipped with repaired tires according to professional practice code : as of 1 January 2012, all tires repaired on sidewall and according to professional practice code must be stamped with "REP" marking.

[2] **65822-67** Aluminium plaque P/N.

VULCANIZERS

"VULCASCHRAD"

Conform to EC Standard, electromagnetic compatibility standard for regulation : EN 61326.

SAFETY INFORMATION
- Vulcanization devices must always be operated under operator supervision.
- Disconnect the cabinet from the mains supply once vulcanization is complete.
- Never perform work in the cabinet without disconnecting the mains supply.
- These vulcanization equipment is equipped with a ground fault current circuit breaker for optimised operator safety.
- Vulcanization equipment : Supply pressure max 2 bar.
- Supply with filtered, non-lubricated air.

• Electronic setting to set the heating temperature according to the type of tire used, for optimum and simultaneous curing from the bead to the tire crown and regular pressure around the patch, especially at the shoulder.

	67295-67	67296-67
Applications		
Description	Vulcaschrad complete passenger car low profile	Vulcaschrad complete passenger car, passenger car low profile, light truck and 4 x 4
Tire series	30 to 80	30 to 85
Accessories included	• 2 moulds (Ref. Not referenced and 65667-67) • 2 airbags (Ref. 67301-67 and 67319-67)	• 3 moulds (Ref. 67297-67, 65667-67 and 67299-67) • 3 airbags (Ref. 67301-67, 67319-67 and 67303-67)
Power supply	230 V 2 P + T 16 A 30 mA	
Power (W)	800	
Timer (Time)	0 - 12	
Weight (kg)	30 (67295-67)	38 (67296-67)
Heating mould temperature (max °C)	145	
Heating pad temperature (°C)	120	
Operating pressure (bar) dry air calibrated	2	
Maxi patch code	140	
Average curing time (mn)	60	
Cabinet dimensions (cm)	L. 20 x W. 20 x H. 30	
Device dimensions (cm)	L. 106 x W. 30 x H. 54	

SCHRADER PACIFIC Tire Hardware Solutions

COMPONENTS FOR "VULCASCHRAD"

SPARE PAD

	67382-67
Description	External heating pad
Type	TCR
Dimensions (cm)	32 X 21

SPARE MOULDS

	65667-67	67297-67
Description	Sidewall mould	Sidewall mould
Applications	Low profile	
Tire series	30 to 65	65 to 80

INTERMEDIARY PROTECTIONS

	66850-67
Description	Intermediary protection with fixtures

SPARE AIRBAGS

	67319-67	67301-67	67303-67
Description	Sidewall airbag	Sidewall airbag	Sidewall airbag
Applications	Low profile		
Tire series	30 to 65	65 to 80	75 to 85

DOUBLE SECTION PAD

	67308-67
Description	Double section pad

VULCANIZERS "VSM 150"

Vulcanization devices must always be operated under operator supervision.
• Disconnect the cabinet from the mains supply once vulcanization is complete.
• Never open the cabinet without disconnecting it from the mains supply.

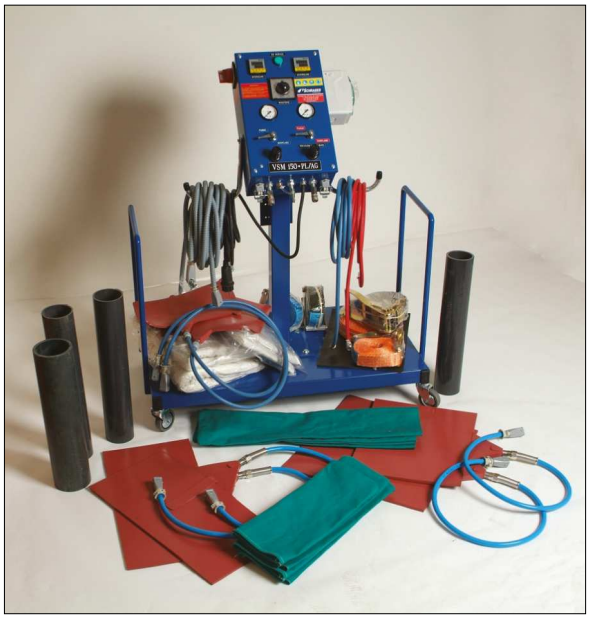

Specifications		
	66662-67	**66663-67**
Power supply	230 V 2 P + T 16 A 30 mA	
Max power (W)	3500	
Timer (Time)	0 - 12	
Weight (kg)	67	147
Heating pad temperature (°C)	120	
Operating pressure (bar) dry air calibrated	2	
Maxi patch code	144	144 / 186 and 052
Control box dimensions (cm)	L. 40 x D. 25 x H. 60	
Device dimensions on stand (cm)	L. 94 x D. 66 x H. 134	

	66662-67	**66663-67**
Applications		
Description	Vulcaschrad complete	Vulcaschrad PL - AGR - GC - TP
Accessories provided	- 1 regulating cabinet VSM 150. 2 adjustable thermoregulators and its trolley with wheels - 4 inflation extensions (67445-67) - 2 heating pads 32 x 21 cm (TCR) (67382-67) - 2 heating pads 56 x 27 cm (T1)(67383-67) - 2 flat airbags 34 x 22 cm (C13) (65445-67) - 2 flat airbags 57 x 31 cm (C2) (65444-67) - 3 straps for light trucks, little size L=3m (66837-67) - 3 straps for trucks, large size L=3m (67447-67) - 1 protective screen 40 x 28 cm (65870-67) - 1 protective screen 77 x 37 cm (67419-67) - 5 plastic filling tubes ø 11, L = 27 cm (65873-67) - 10 plastic filling tubes ø 11, L = 40 cm (65874-67) - 2 set of 6 compensation bags 11 x 45 cm light truck (65875-67) - 2 set of 6 compensation bags 11 x 55 cm heavy truck (65876-67)	- 1 regulating cabinet VSM 150. 2 adjustable thermoregulators and its trolley with wheels - 5 inflation extensions (67445-67) - 2 heating pads 32 x 21 cm (TCR) (67382-67) - 2 heating pad 56 x 27 cm (T1) (67383-67) - 1 heating pad 42 x 33 cm (T1A) (65865-67) - 1 heating pads 48 x 44 cm (T1B) (65866-67) - 2 flat airbags 34 x 22 cm (C13) (65445-67) - 2 flat airbags 57 x 31 cm (C2) (65444-67) - 1 flat airbag 50 x 50 cm (C2B) (65872-67) - 3 straps for light trucks, little size L=3m (66837-67) - 3 straps for trucks, large size L=3m (67447-67) - 1 protective screen 40 x 28 cm (65870-67) - 1 protective screen 77 x 37 cm (67419-67) - 5 plastic filling tubes ø 11, L = 27 cm (65873-67) - 10 plastic filling tubes ø 11, L = 40 cm (65874-67) - 12 plastic filling tubes ø 11, L = 50 cm (67433-67) - 20 plastic filling tubes ø 11, L = 60 cm (67435-67) - 2 set of 6 compensation bags 11 x 45 cm light truck (65875-67) - 2 set of 6 compensation bags 11 x 55 cm heavy truck (65876-67) - 1 set of 20 compensation bags (65434-67) - 1 set of 6 filling bags (3 of 30 x 25cm) and (3 of 25 x 14 cm) (65432-67)

SCHRADER PACIFIC Tire Hardware Solutions

VULCANIZER "VSM 200"

- The advantages of these vulcanizers are their use adaptability, small size and capacity to repair all tire sizes up to 59/80 R63.
- Flexible rubber heat pads and air bag conform to the profile of radial, cross ply, wide base low profile and avoid any deformation during vulcanization.
- The composition of VSMs depends on the mini and maxi size of the tires and patches to be vulcanized.
- Electronic setting of the heating temperature according to the type of tire Schrader Pacific Tire Hardware Solutions used.

SINGLE-ZONE VULCANIZER WITH 2 ADJUSTABLE THERMOREGULATORS FROM 0 TO 140°C FOR VULCANIZING ONE TIRE AT A TIME

REGULATING CABINET

	67370-67	65328-67
Applications		
Description	Cabinet with 2 thermoregulators, 2 air regulators without stand	Mobile support option - (25 kg)

Specifications	
Power supply	230 V 2 P + T 16 A 30 mA
Power (W)	3500
Timer (Time)	0 - 12
Weight (kg)	30
Heating pad temperature (°C)	120
Operating pressure (bar) dry air calibrated	2
Control box dimensions (cm)	L. 40 x depth 25 x height. 60

For multicure options, contact us

- Vulcanizing devices must always work under the supervision of an operator.
- Disconnect the cabinet from the mains as soon as the vulcanization is finished.
- Never work in a cabinet without disconnecting the mains.
- These vulcanizers are equipped with a circuit breaker to optimise operator safety.

ACCESSORIES

- Accessories must be ordered separately.
- Consult us on request

Vulcanizer	Maxi patch code: 140	Maxi patch code: 144	Maxi patch code: 186 ou 052	Maxi patch code: 150	Maxi patch code: 156	Maxi patch code: 162
VSM 200	V1	V2	V2 + V3	V2 + V4	V2 + V4 + V5	V2 + V4 + V5 + V6

COMPONENTS FOR "VSM" VULCANIZERS

MONO-ZONE FLEXIBLE HEATING PADS

T. 100 to 120°C with protective film, for cabinets VSM 150, VSM 200, VSM 204 and VSM 208

- Never leave the heating pad unattended during a vulcanization.
- The pad must be powered with talc on each side before use.
- Handle pads only with the power off (not connected to the cabinet) and with two hands in order to avoid damaging them.
- Never pick up the pads by the electrical connections.
- Store the pads flat.
- Properly chock pads during vulcanization

The code is written on a corner of the pat. For multicure options, contact us

	67382-67	67383-67	65865-67	65866-67	67384-67
Code	TCR	T1	T1A	T1B	T8
Dimensions (cm)	32 x 21	56 x 27	42 x 33	48 x 44	73 x 35
Use					
Protective foil	66551-67	66544-67	66545-67	66546-67	66550-67

	67385-67	67386-67	67388-67	67389-67	66797-67
Code	T5	T6	T2	T3	Set of 25 mould-release tissues 20 x 50 cm
Dimensions (cm)	86 x 44	112 x 44	52 x 49	66 x 69	
Use					
Protective foil	66548-67	66549-67	66546-67	66547-67	

PROTECTIVE SCREENS

	65870-67	65871-67	67419-67
Dimensions (cm)	40 x 28	60 x 60	77 x 37

SCHRADER PACIFIC Tire Hardware Solutions

For personalized markings, contact us

COMPOSANTS FOR "VSM" VULCANIZERS

EXTRA FLAT AND VERY FLEXIBLE AIRBAGS

	61210-67	61211-67	61212-67	61213-67	61214-67	61215-67
Dimensions (cm)	34 x 22	40 x 40	50 x 50	57 x 31	60 x 60	75 x 35

	61216-67	61217-67	61218-67	61219-67	61220-67
Dimensions (cm)	80 x 80	100 x 50	100 x 100	120 x 50	120 x 60

FLAT AIRBAGS

Equipped with 2 reinforcement covers

	65445-67	65444-67	65872-67	67411-67	67404-67	67405-67	67407-67	67445-67
Dimensions (cm)	34 x 22	57 x 31	50 x 50	80 x 80	75 x 35	100 x 50	120 x 60	Extension for flat airbag, L= 50 cm
Code	C13	C2	C2B	C90	C31	C51	C120	

PLASTIC RIGID FILLING TUBES

	65873-67	65874-67	67433-67	67435-67
Dimensions Ø x L. (cm)	11 x 27	11 x 40	11 x 50	11 x 60
Use				

BAGS AND STRAPS

PRESSURE AND HEAT TRANSFER BAGS, FILLED WITH AGGLOMERATE BALLS

	65601-67	65602-67	65603-67	66841-67
Dimensions (cm)	11 x 11	13 x 18	16 x 22	8 x 30

	66843-67	66844-67	66845-67	66840-67
Dimensions (cm)	14 x 27	10 x 43	18 x 33	Set of 9 bags (1 of each)

EXTERNAL FILLING BAG TO AVOID DEFORMATION OF THE PAD

(sold empty)

	65432-67
Dimensions (cm)	Set of 6 bags : - 3 bags 25 x 14 - 3 bags 30 x 25
Use	

COMPENSATION BAGS FOR INTERNAL WEDGING

(sold empty)
to be filled with dry, very fine sand

	65875-67	65876-67	65434-67
Quantity	Set of 6	Set of 6	Set of 20
Dimensions (cm)	11 x 45	11 x 55	15 x 70
Corresponding airbag	C13	C1, C2, C31	C31, C51, C120
Use			

STRAPS

	66837-67	67447-67	67448-67	67449-67	66838-67
Width x length (cm)	300 x 5	300 x 5	400 x 5	500 x 5	Guide-straps 5 rounds
Type of tensioner	Small	Large	Large	Large	
Colour	Blue	Blue	Orange	Green	
Marking (*)	SCHRD 3	SCHRD 3	SCHRD 4	SCHRD 5	

(*) The No. corresponds to the length of the strap in m

SCHRADER PACIFIC
Tire Hardware Solutions

MANUAL VULCANIZING PRESS "M50"

FOR SIDEWALL REPAIR

- Portable vulcanizing press for repairing all types of tire .
- 2 heating units.
- Constant pressure in the tire throughout the operation.
- Timer.
- Leg for ground fixture optional extra.

	65897-67
	Sold complete with swivel support base (65982-67)
Power supply	230 V 2 P + T
Power (W)	1200
Weight (kg)	29.4
Dimensions of heating unit (cm)	19 x 10
Device dimensions (cm)	Length 63 x Width. 20 x Height. 98

65982-67
Optional directionable stand optional

FOR HEEL REPAIR

	61598-67
	Heel Repair Machine
Power supply	230 V 2 P + T
Weight (kg)	5,5
Device dimensions (cm)	Lenght 270 x Width 200 x Height 210

- Everything you need to properly maintain tires
- A must for professionals

STORAGE OF PARTS:

To maintain the expiry dates, store the parts, products and solutions:
- In a clean dry place.
- Away from frost and heat
- Keep the containers closed

Follow the user instructions.

FDS

THE LABELLING SYMBOLS FOR HIGH-RISK PRODUCTS:
are given for information purposes only. The products are liable to change and their safety sheets are available at your disposal.

Aftersales service: A trained & experienced aftersales team

Mounting, calibration, repair and maintenance:
- Pressure gauges
- Hydropneumatic jacks
- Tire regroovers
- Construction and agricultural vehicle tire mounting tools
- Torque wrenches

For non-manufactured products, Schrader Pacific Tire Hardware Solutions has obtained tool supplier approvals for internal aftersales services.

Service SAV Schrader S.A.S.
Quai n° 2 - Rue Jean Mermoz
25300 Pontarlier - France
France => Tél. : +33 (0) 381 38 56 60
International => Tél. : +33 (0) 381 38 56 27

Cattini OLEOPNEUMATICA
Cattini-approved repair service

SERVICE TOOLS AND EQUIPMENT

- Impact wrenches ..... 172 - 173
- Impact sockets ..... 174 - 177
- Tire regroovers 178
- Handling lifting ..... 179 - 183
  Jack stand, hydraulic jacks, mobile hydropneumatic lifts
- Tools for 1-piece rim 184
- Products for tire mounting and removal. ..... 185 - 187
  Tire paste, cream, gel, lubricant, sealant and brushes
- Marking chalks and STYLMARK®. 186
- Workshop service: lubricant, degreaser and cleaner for brakes ..... 188 - 189
- Tire wear gauges 190
- Tools for valves 191
- Levers ..... 194 - 195
- Torque wrenches 196
- Personal protective equipment ..... 197 - 199

IMPACT WRENCHES

• Wear ear protection.

	66669-67	65805-67	65807-67	66865-67
Code	KP-1469A	KP-1434	KP-1450	KP-1838 A
Square (¨)	1/2	1/2	1/2	1
Handle	Revolver	Revolver	Revolver	Straight
Impact system	Simple	Double	Double	Double
Body and handle	Metal	Metal	Composite	Metal
Air exhaust	Under Handle	Under Handle	Under Handle	On the side
Speed (rpm)	10000	8000	8000	5000
Torque (N.m)	678	814	949	2712
Weight (kg)	1,55	2,7	2,25	7,04
Length (mm)	120	184	178	347
Air inlet connector (¨)	G 1/4 F	G 1/4 F	G 1/4 F	G 1/2 F
Shaft	Short	Short	Short	Short
Air consumption (L/min)	133	113	125	255
Acoustic pressure dB(A)	97	95	96	106
Noise level dB(A)	108	106	107	121
Acoustic pressure dB(C)	110	119	109	117
Vibration Level (M/S^2)	10,3	8,8	10,2	17,2
Pressure relief kit: 6 bar limit (order separately)	66816-67			66665-67

PRESSURE RELIEF KIT LIMITING PRESSURE TO 6 BAR FOR IMPACT WRENCHES

	66816-67	66817-67	66665-67
Air inlet connector (¨)	G 1/4 F	G 3/8 F	G 1/2 F
For hose Ø (mm)	7	12	12

AIR INLET CONNECTORS

65088-67	65845-67	65093-67
Conical G ¼ pre-Teflon-coated threaded quick connect fitting	Conical G 3/8 pre-Teflon-coated threaded quick connect fitting, air passage 11 mm	Conical G 1/2 pre-Teflon-coated threaded quick-connect fitting, air passage 11 mm

SCHRADER PACIFIC Tire Hardware Solutions

• Maximum operating pressure : 6 bar, filtered and lubricated.
Lubricate and clean tools with the recommended products
• Pressure relief kit must be used to keep pressure at 6 bar (see below table).
• To preserve impact wrenches, use the necessary filters.
• Wheel nut tightness must be checked after 25 to 40 km and again after another 100 km, then regularly.
• Follow the user instructions.

65810-67	66670-67	65808-67	66091-67	61413-67
KI-36	KP-1838A-6	KP-1032	KI-30	MW362-H10
1	1	1	3/4	1
Straight	Straight	Revolver	Revolver	Straight
Double	Double	Double	Double	Triple
Metal	Metal	Metal	Metal	Steel
On the side	On the side	Under handle	Under handle	In front
4000	5000	5500	5500	
2441	2712	1627	1492	5297
11.3	8.1	5.64	5.6	14.8
518	487	224	220	296
G 1/2 F	G 1/2 F	G 3/8 F	G 3/8 F	F-G 1/2 BSP
Long	Long	Short	Short	Short
312	255	269	269	
101,95	104	100	98,35	
112,94	120	111	109,35	
102	115	101	99	
15.24	14.5	21.64	9.13	
66665-67		66817-67		Special impact wrenches Earthmove

IMPACT WRENCH BOX

	61549-67
Kit contents	-1 square impact wrench 1/2'' - Ergonomic handle - 1 Lithium-ion 21V battery charger - 2 Lithium battery 21V-4000mAh - Brushless motor
Square (")	1/2
Torque (N.m)	1080
Weight (kg)	2.4
Max Speed (RPM)	2400 / 1900 / 1500

61550-67
Additional battery for Impact Wrench 61549-67

PNEUMATIC TOOL LUBRICANT

65775-67
Special lubricant for pneumatic tools with lubricating agentsand anticorrosion agents. 1 x 1L can.
FDS *Expiry date: 2 years after the date of manufacture*

IMPACT SOCKETS 1/2"

IMPACT SOCKETS SHORT 1/2"

	Dim. on flat (mm)	Ø ext. (mm)	W. (mm)
65059-67	17	26	38
65060-67	19	30	38
65061-67	21	32	38
65781-67	30	42	46
65782-67	32	44	46
65855-67	33	46	46

IMPACT SOCKETS LONG 1/2"

60268-67	13	20,2	82
60269-67	16	25	82
60270-67	17	25,9	82
60271-67	18	26,9	82
60272-67	19	29,9	82
60273-67	21	31,9	82
60274-67	22	31,9	82
60275-67	24	35,9	82
60276-67	27	39,9	82

IMPACT SOCKETS LONG 1/2" EXTRA THIN

60277-67	17	24	82
60278-67	19	26	82
60279-67	21	28	82

IMPACT SOCKETS LONG 1/2" PROTECTED

66704-67	15	21,4	85
65056-67	17	23,6	85
65057-67	19	25,9	85
65058-67	21	27,8	85
66576-67	22	29,4	85

Protected sockets for aluminium rims and extra-thin sockets are only designed for use with hand tools. Tightening must be performed with a torque wrench.

SCHRADER PACIFIC
Tire Hardware Solutions

IMPACT SOCKETS KIT 1/2"

66701-67	66703-67	66702-67
Kit of 11 SHORT Sockets Car 1/2" (12, 13, 14, 15, 16, 17, 18, 19, 21, 22, 24 mm)	Kit of 5 Protected LONG Sockets Car 1/2" (15, 17, 19, 21, 22 mm)	Kit of 11 LONG Sockets Car 1/2" (12,13, 14, 15, 16, 17, 18, 19, 21, 22, 24 mm)

61379-67
Kit of 3 Protected SHORT Sockets Car 1/2" (17, 19, 21 mm)

IMPACT SOCKETS 3/4"

IMPACT SOCKETS SHORT 3/4"

	Dim. on flat (mm)	Ø ext. (mm)	W. (mm)
66587-67	23	35	52
66588-67	24	36	52
66589-67	26	40	52
66590-67	27	40	52
66591-67	29	42	52
66592-67	30	44	52
66593-67	32	44	52
66594-67	33	47	56
66595-67	36	51	56
66596-67	38	53	56

IMPACT SOCKETS LONG 3/4"

66577-67	23	35	85
66578-67	24	36	85
66579-67	26	40	85
66580-67	27	40	85
66581-67	29	42	85
66582-67	30	44	85
66583-67	32	44	85
66584-67	33	47	85
66585-67	36	51	85
66586-67	38	53	85

IMPACT SOCKETS 1"

IMPACT SOCKETS SHORT 1"

66597-67	23	40	58
66598-67	24	40	58
66599-67	26	42.5	58
66600-67	27	44	58
66601-67	29	46	60
66602-67	30	48	60
66603-67	32	50.9	60
66604-67	33	52	62
66605-67	36	52	62
66606-67	38	52	62

IMPACT SOCKETS EXTRA LONG 1"

	Dim. on flat (mm)	Ø ext. (mm)	W. (mm)
60325-67	27		270
60327-67	30		270
60328-67	32		270
60329-67	33		270

EXTRA THIN IMPACT SOCKETS LONG 1"

66607-67	23	38	108
66608-67	24	39	108
66609-67	26	41	108
60289-67	27	42.5	108
60290-67	29	45	108
60291-67	30	45.5	108
60292-67	32	48	108
60293-67	33	50	108
60295-67	36	54	108
60296-67	38	56	108

IMPACT SOCKET WITH TORQUE CONTROL 1"

	Dim. on flat (mm)	Torque (N.m)
60324-67	24	350
60297-67	27	350
60298-67	27	450
60299-67	29	400
60300-67	30	500
60301-67	32	450
60302-67	32	600
60303-67	33	600
60304-67	36	600
66981-67	32	650
66982-67	33	650
66983-67	32	750
66984-67	33	750

- Not for untightening.
- Check tightness with a torque wrench.

SCHRADER PACIFIC
Tire Hardware Solutions

IMPACT SOCKETS 1"

IMPACT SOCKETS TRUCK AND EM LONG 1"

	Dim. on flat (mm)	Ø ext. (mm)	W. (mm)	Use
65756-67	23	40	90	
60280-67	24	40	92	
60281-67	26	42.5	90	
60282-67	27	44	90	
60283-67	29	46	90	
60284-67	30	48	90	
60285-67	32	50.9	90	
60286-67	33	53	90	
60287-67	36	56	90	
60288-67	38	58	92	
65175-67	40	60	92	
65176-67	41	61.5	92	
65177-67	42	63	92	
65178-67	44	66	92	
65179-67	45	67	92	
65180-67	46	68	92	
65181-67	48	71	95	

IMPACT SOCKETS 1" FOR SQUARE

	Square
65189-67	17,5
65190-67	20,5

IMPACT SOCKETS KIT 1"

66613-67

Kit of 8 LONG Truck impact sockets 1"
(24+27+29+30+32+33+36+38)

60267-67

Kit of 8 SHORT Truck impact sockets 1"
(24+27+29+30+32+33+36+38)

UPSIZE

	Female	Male
65289-67	3/4"	1"
66612-67	1/2"	3/4"

DOWNSIZE

	Female	Male
66611-67	3/4"	1/2"
60310-67	1"	3/4"

EXTENSIONS

	Type	W. (mm)
66614-67	1/2	125
66615-67	3/4"	250
60305-67	1"	175
65663-67	1"	330

65225-67

Removal kit for car theft-proof nuts (damaged nuts or special wrench).
Set of 2 reversible sockets : (21 x 24.5 and 26 x 27.5) + extension

TIRE REGROOVER

Includes: One template 65616-67 in each box.

PS15 PLUS	PS15 Truck STAR PLUS
S-4145-M1	**S-4145-V5**
230 V -50 Hz - Power 500 w	
- Metal case - Ergonomic handle with head that takes all blades on the market - Increased power enabling "non-stop" regrooving of truck tire casings - Easy handling thanks to its rubber cables. - In accordance with NF standard EN 60335-2-45 **63184-M1**: PS15 PLUS 120 V - 60 Hz (or 50 Hz)	- Digital display of the heating power, selection with integrated (+) and (–) buttons - 1 to 99 % adjustment of the power delivered by the transformer - Standby after 15 min. of no use. - Metal case - Particularly well designed head that takes all blades currently on the market - Increased power enabling "non-stop" regrooving of truck tire casings - Easy handling thanks to its rubber cables. - Conforms to EC electrical standards (325-1 and 325.2.45) **63184-V5:** TRUCKSTAR PLUS 120 V - 60 Hz (or 50 Hz)

Please note. When ordering the regroover, don't forget to order the blades.

33759-67	Complete handle (slides + head + cables)
33760-67	Spare head
63183-67	Set of 2 cables
S-4736-1	Set of 2 slides
S-4391-1	Slight lightening wrench

- It's a tough machine, specially designed for tire maintenance specialists, for regrooving truck tires.
- For regrooving, see the manufacturer's guidelines.

BLADES

- Sold in boxes of 20, except S-4730-1 per 10.

* Regrooving width approx.

Rounded	R1	R2	R3	R4	R5	C6
	S-4700-1	**S-4701-1**	**S-4702-1**	**S-4703-1**	**S-4704-1**	
	* 3 to 5 mm	* 5 to 11 mm	* 7 to 13 mm	* 9 to 16 mm	* 11 to 18 mm	
Squares	C1	C2	C3	C4	C5	
	S-4705-1	**S-4706-1**	**S-4707-1**	**S-4708-1**	**S-4709-1**	**S-4730-1**
	* 3 to 5 mm	* 6 to 10 mm	* 8 to 12 mm	* 10 to 14 mm	* 12 to 17 mm	Agricultural *20 to 28 mm

Follow the user instructions.

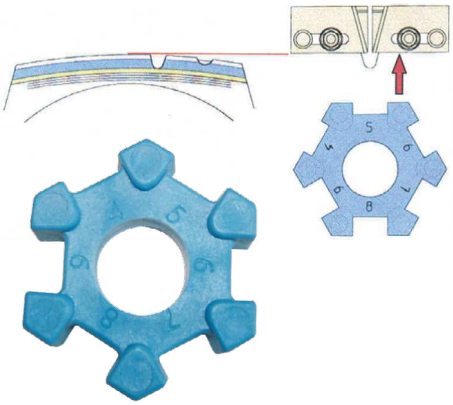

65616-67

LIFTING PADS

61530-67

Box of 4 lifting pads for Tesla Model 3, Y, X and S. This set ensures safe lifting of the vehicle. Additional seal kit included !

SCHRADER PACIFIC Tire Hardware Solutions

HANDLING LIFTING

ADJUSTABLE PROPS

	450301	451600	451205	61474-67
Description	• 4-leg base: more stable, stronger and safer. • Handle remains locked on loading (can serve as carrying handle).		• Low profile model on wheels with handle. • 5 height adjustment positions, locking by pin. • Square base 22 cm to stabilise the load.	• Axle stand in conformity with EU standards
Capacity (T)	3	6	12	15
Net weight (kg)	7	13,8	20	13
Min. height (mm)	305	395	302	310
Max. height (mm)	450	625	450	480
Base (mm)	209 x 185	293 x 263	272,5 x 220	350 x 310
Type	Fixed	Fixed	Mobile	Fixed
Sold in	Pairs	Pairs	Pairs	Unit

PORTABLE HYDRAULIC BOTTLE JACKS

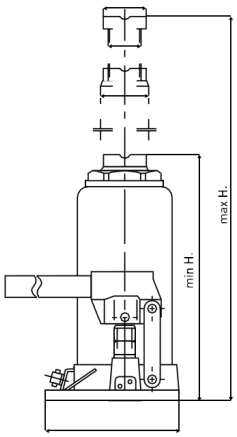

	410200	410600	411200	411500	412000	413000	65277-67
Capacity (T)	2	6	12	16	20	30	50
Net weight (kg)	2,3	4,4	7,2	8,3	10,5	14,6	28,5
Min height (mm)	158	197	214	225	244	285	252
Max height (mm)	308	382	399	425	449	460	402
Piston stroke (mm)	90	125	125	140	145	180	150
Extension screw (mm)	60	60	60	60	60	60	-
Base (mm)	96 x 93	116 x 116	140 x 135	140 x 140	155 x 140	175 x 160	180 x 230
Material	Steel						
Base material	Iron						
Use	Can be used horizontally or vertically						

HANDLING LIFTING

MOBILE AIR HYDRAULIC JACKS

(1) Ultra-light device, ideal for workshops and repair trucks, and for narrow environments. Designed for lifting low-floor vehicles.

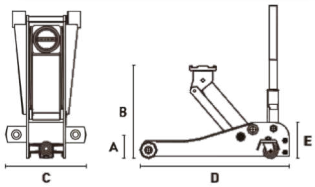

(1)

	420250	420330
Capacity (T)	2	3
Net weight (kg)	32	31
A: Min height (mm)	75	120
B: Max height (mm)	510	450
C: Width (mm)	343	344
D: Length (mm)	686	618
E: Height (mm)	140	160

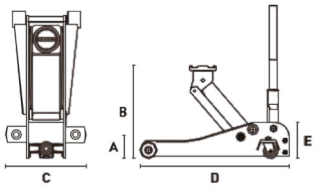

	420500	421000
Capacity (T)	5	10
Net weight (kg)	90	145
A: Min height (mm)	150	160
B: Max height (mm)	680	550
C: Width (mm)	366	485
D: Length (mm)	1505	1355
E: Height (mm)	1345	1635

SCHRADER PACIFIC
Tire Hardware Solutions

COLLARS

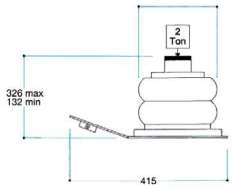

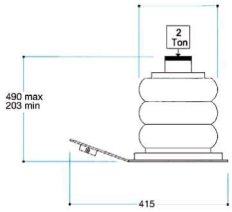

	65856-67	65857-67
h. (mm)	50	100

- High-resistance membrane with internal telescopic sliding.
- Stop device and safety valve.
- Reliable and requires no maintenance.
- Silent, easy to use and light to transport.
- Supply with filtered, non-lubricated air.
- Supply with filtered, lubricated air.

PNEUMATIC PORTABLE JACKS

	65268-67	65354-67
	YAK 132	YAK 203
Capacity (T)	2	2
Net weight (kg)	14	17
Power pressure (bar)	8 to 10	8 to 10
Air consumption (nl/min)	100	100
Max stroke (mm)	194	285
Min. height (mm)	132	205
Number of pistons	2	3
Piston stroke (mm)	97 - 97	95 - 95 - 95

HYDRAULIC JACK

	65269-67
	YAK CANGURO
Capacity (T)	9 t
Weight (kg)	30 Kg
Min. height	340 mm
Max. height	940 mm
Width	260 mm
Length	345 mm

HANDLING LIFTING

WHEELED HYDROPNEUMATIC LIFTS

• Reliability, durability and easy use. Special high quality materials.
Control tests on each unit. Air hydraulic pump with unique movement. Automatic retraction of pistons.
• The double descent valve allows a constant and controlled speed when the jack is loaded and faster when empty. Perfect behaviour of the load guaranteed, even in case of accidental breakage of an air or oil pipe.
• Pressure relief valve protects jack from excessive load.
• The lever with 3 positions allows very easy handling and precise positioning under the load.
• Delivered with 2 steel extensions 70 and 120 mm plus a non-slip toothed plate.
• Operating pressure 8 to 12 bar (Supply with filtered, lubricated air).
• Compatible lubricants : ATF DEXRON IID or IGOL ATF 430.
• Follow the user instructions.

	66069-67	66068-67	66858-67
Model	P152C	P182C	P102
Capacity (T)	30/15	29/18	30/15
Net weight (kg)	39	37	28
Maxi operating pressure (bar)	9-12	9-12	9-12
Jack height closed (mm)	175	150	175
Max height with extensions (mm)	515	457	465
Total piston stroke (mm)	186	157	186
Total height (mm)	1250	1250	-
Width (mm)	215	215	215
Length (mm)	420	420	400
Mini operating temperature (°C)	-	-	-
Maxi operating temperature (°C)	-	-	-

Extensions included for references :
66069-67 / 66068-67 / 66858-67

SCHRADER PACIFIC
Tire Hardware Solutions

INTENSIVE USE

Tough machines, designed for tire specialists for raising low-profile vehicles and trucks.

• Bottle jacks with slam stop button.
• Actuated with single-acting pump, they are equipped with safety devices that protect them against overloads and prevent them lowering in the event of accidental breakage of the tubes. The 2 pistons are manufactured with a special high-strength steel. They owe their stability to their wide base and large-diameter wheels and the three-position handle makes them easy to handle. Lowering of the empty piston is commanded by a depressurising system.
• Come with steel extensions.
• Operating pressure : 9 to 12 bar (Supply with filtered, lubricated air).
• Compatible lubricants : ATF DEXRON IID or IGOL ATF 430.
• Follow the user instructions.

61372-67	65037-67	65015-67	65016-67	65017-67
YAK 135	YAK 215P	YAK 215/N	YAK 217/N	YAK 312
30	40/20	40/20	40/20	60/30/15
57	35	39	41	50
8-10	8-12	8-12	8-12	8-12
350	150	150	170	120
-	-	-	-	-
230	150	150	171	135
1415	1100	1400	1400	1385
275	300	300	300	300
725	500	525	525	660
-20	-20	-20	-20	-20
+50	+50	+50	+50	+50

61442-67
YAK 135 + tray 70 + wheels

Recommended filtering fitting:
65491-67 and pressure regulator 65579-67

EXTENSIONS

	65123-67	65124-67	65125-67
Height (mm)	10	70	120

61513-67
V Plate for YAK

TOOLS FOR 1-PIECE RIM

"D.S.P.L.C.": COMPACT TRUCK BEAD BREAKER FOR RIMS WITH PROTECTED VALVE

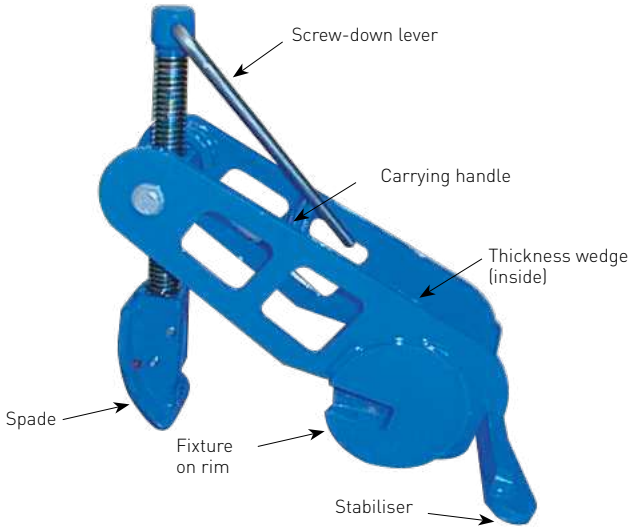

These new rims have the following features:
- valve positioned differently, making access complicated
- addition of a safety hump

Tire dismounting is very difficult, especially at the bead.
DSPLC resolves this problem in a very simply way.
The operation is fast and requires no special effort.

FITMENT PROCEDURE:
- Start with wheel laid flat, spider facing upwards.
- Grease the bead of the tire at the spot where you want to beadbreak it.
- Hook the bead breaker on the edge of the rim.
- Screw, while guiding the spade on the flank of the tire as close as possible to the bead and to the rim edge. Stop as soon as the bead crosses the hump.
- To remove the device, proceed in reverse order.
- Alloy rim spiders are thicker than those on metal rims.

A thickness wedge fitted with a wing nut is provided to compensate this difference.

60308-67 Mechanical bead breaker for hollow base truck wheels with protected valve, steel or alloy rims of sizes 17.5, 19.5 and 22.5.
Weight: 14 kg

- Use : before using it for the first time, fix the stabiliser using the 2 hexagon socket screws provided.
- Handling : use the carrying handle.
- Upkeep : regularly clean and grease the screw and the spade.

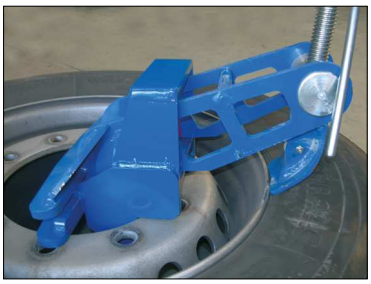

65003-67 **Zero inset rims, 120, 125 and 130**
Optional collar adaptable on the DSPLC 60308-67
Weight : 9.5 kg

RUCK RIM BREAKERS

	65528-67 65528-99	65529-67 65529-99
	DISMA	**LESMA** (For tank transporter)
Use	Jack placed between frame and rim	Jack placed between two dual rims
Dimensions	L. 152 mm, Ø 40 mm	L. 79mm, W. 56 mm, thickness 45 mm + wedge (8mm)
Cylinder stroke (mm)	75	11
Power at 700 bar (T)	5	11
Weight (kg)	1.7	1.65
	Tapping 3/8" NPT	Tapping 3/8"" NPT

Makes removal easier when the hub and rim are welded together due to an electro-galvanic reaction (particularly on alu rims).

Never get too close to a tool while in use.
***suffix 67 :** tools equipped with quick connect coupler 67072-67.
***suffix 99 :** tools equipped with screw connection 67065-67.

SCHRADER PACIFIC Tire Hardware Solutions

TIRE MOUNTING AND REMOVAL PRODUCTS

WHITE CREAM FOR TIRES

UNIVERSAL	
65947-67	1 kg bucket (per unit)
65947-71	1 kg bucket (per 8)
65948-67	3 kg bucket
65949-67	5 kg bucket
FDS	+50°C -15°C

Expiry date: 5 years after the packing date

BLACK CREAM FOR TIRES

UNIVERSAL BLACK	
66179-67	1 kg bucket (per unit)
66179-71	1 kg bucket (per 8)
66180-67	3 kg bucket
66181-67	5 kg bucket
FDS	+50°C -15°C

SPRAY LUBRICANT

SOCOLUB V 0690		
65023-67	400 ml spray lasts for 100 mountings	Per unit
65023-12		Per 12
61445-67	5 L can	
FDS		

Expiry date: 2 years after the packing date

Leak detector 500 mL	
65454-67	Concentrated product to be diluted with water

Expiry date: 5 years after the packing date

FDS	+25°C +15°C

Empty spray for 65454-67	
65455-67	Empty spray for leak detector 500 ml

Rim protector		
61482-67	A yellow plastic rim protector	1 PC / Box
To avoid scratches on aluminum rims when beading the tire		

BRUSHES

60038-67	65076-67	65864-67	60804-67	60805-67
Flat brush width 40 mm, L = 210 mm	Flat brush width 65 mm, L = 225 mm	Round brush Ø 32 mm, L = 330 mm	For tire paste and grease	
			VL-PL Spare head 66152-67	PL-GC Spare head 66153-67

TIRE MOUNTING AND REMOVAL

FDS

FDS

Sealing product		MAXIGEL	DETAGEL	
60813-67	**61428-67**	**61537-67**	**65686-67**	**65687-67**
Bead sealer between the tire bead and the rim edge For car rims 1000 ml can Brush cap included	Bead sealer between the tire bead and the rim edge For car rims 945 ml can Brush cap included	Mounting Compound for EM tires. 11.5 bucket	Lubricating gel for removal of truck and EM tires "DETAGEL" 5-litre plastic can Storage temperature : 0 to 40° C Application temperature : 20° C **NB, this product is sensitive to freezing**	Can with applicator cap for lubricating gel 65686-67 1 L plastic can (sold empty)
Expiry date: 5 years after the packing date.	*Expiry date: 2 years after the packing date.*	*Expiry date: 1 year after the packing date.*		

Stylmark	
65763-67	Stylmark 3 mm yellow
65764-67	Stylmark 3 mm white
For all materials and surfaces 50 mL tubes.	

Expiry date:
3 years after the packing date.

Chalks (Box of 12)	
61508-67	Yellow Ø 17.5 mm
61509-67	White Ø 17.5 mm

Chalk holder	
61510-67	Chalk holder for 17.5mm diameter chalks. Used with references 61508-67 and 61509-67.

Soap for hand 5L	
66999-67	With wood micro-fibre. Ingredients gentle on skin.

• This product freezes at 0°C.

SCHRADER PACIFIC
Tire Hardware Solutions

TIRE MOUNTING AND REMOVAL

MOUNTING GREASE

- For the mounting and removal of truck, earthmover and handling machinery tires.
- Not for use on car or motorcycle tires.

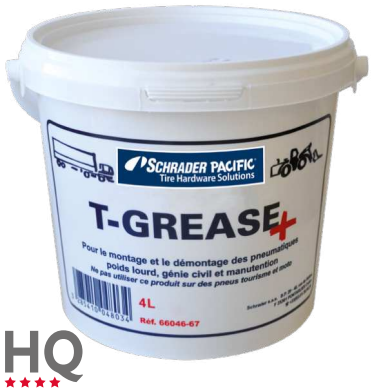

	T-GREASE +	T-GREASE
	66046-67	**66045-67**
Liters	4	4
Use	NB: This product freezes at -18°	
Storage (after opening)	1 year	6 months

FDS +50°C -18°C

FDS +50°C -18°C

Expiry date: 2 years after the packing date.

Expiry date: 1 year after the packing date.

	TIGRE 80	
	R-5084-1	**R-5084-0**
Weight (kg)	4 kg bucket (per unit)	4 kg bucket (per 6)

FDS

Expiry date: 2 years after the packing date.

WORKSHOP SERVICE RANGE

DRY DEGREASER AND LUBRICATING OIL

FDS

Expiry date : Long-lasting products

Aluminium paste lubricant

	Conditionnement	Intended use	Use
A25394-67 (per unit)	500 ml Spray	Static, antifriction lubricant for use at high temperatures and high pressures. Very useful for loosening aluminium rims attached to hubs.	(axle assemblies, bearings), in construction (pneumatic equipment, concrete pumps), in automobiles (o-rings of exhaust, housing, cylinder head).
A25394-12 (box of 12)			

Lubricant-degreaser AC-90

	Conditionnement	Intended use	Use
A06332-67 (per unit)	Spray 400 ml.	Cleans, lubricates and ensures moving parts work smoothly. Eliminates noises and grating, facilitates the mounting and removal of mechanical parts	Silicone-free, inert, can be used on all materials. All-in-one diffuser operating in 2 ways: in the extender for wide diffusion or with the extender for diffusion in difficult-to-reach areas.
A06332-12 (box of 12)			

Brake cleaner

	Conditionnement	Intended use	Use
A25357-67 (per unit)	Spray 600 ml.	Used to completely clean the brake system (discs, drums, trim, supports, springs, etc.). Also used as a degreaser for oils, dirty oils and greases, without leaving residue.	Automobiles and two-wheeled vehicles, brakes, chins, locks, mechanical parts, industry, agricultural sector, etc.
A25357-12 (box of 12)			

SCHRADER PACIFIC
Tire Hardware Solutions

SERVICE TOOLS

FDS

VEHICLE MAINTENANCE

Expiry date : long life product

- This product freezes at 0°C.

Rim and hubcap cleaner		Quantity per box
A16286-67	Rim and hubcap cleaner in 500 ml spray	1
A16286-12		12
Use	Eliminates traces of grease and tar, dust, dirt and break pad residue. For use on aluminium and steel rims and plastic hubcaps.	

Rubber hammer, 5 kg

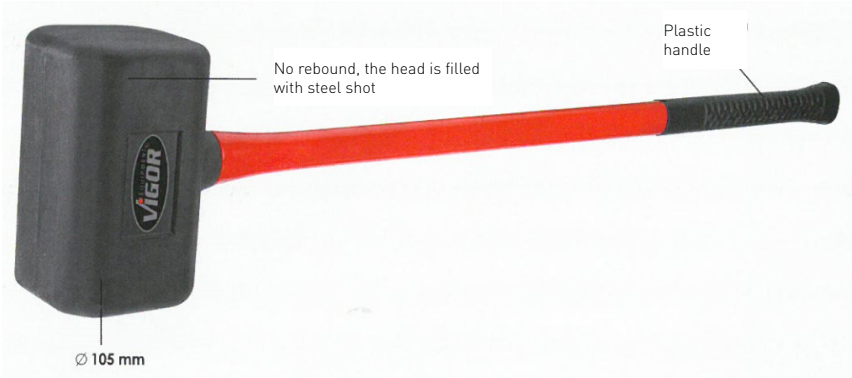

	V2234
Use	Suitable for utility vehicles

	Description
V2820	Ratchet wrench set, long execution in soft pouch 5 x · 8 · 10 · 13 · 17 ·

	Description
V6742	Magnetic holder for holding sockets, torque wrenches or impact wrenches. Strong magnets (80 mm each) guarantee a good grip on forklifts, workshop carts or other or other ferrous surfaces. Magnetic holding force : approx. 20 kg.

SCHRADER PACIFIC
Tire Hardware Solutions

TREAD DEPTH GAUGES

TREAD DEPTH GAUGE & ELECTRONIC PRESSURE GAUGE

2 functions on one tool

- Automatic turn-off
- Backlit dial
- 2 interchangeable batteries CR2032
- Tread depth or pressure gauge selection function

	Gauge	Tread depth gauge
66185-67	• 0.35 to 6.8 bar (5-99 psi or 35-680 Kpa or 0.4-7.00 kg/cm²). Measurement accuracy: 1 % ±0,05 bar	• Graduated from 0 to 15 mm (0 to 19/32"). • Coloured zone depending on depth <1.6 mm = zone coloured red 1.6 to 3.2 mm = zone coloured yellow >3.2 mm = zone coloured green • Accuracy: 0.3 mm. Resolution: 0.1 mm

For personalization, contact us

Recommended technical inspection.

	Description	Graduation (mm)
S-4026-1	Tire tread depth gauge graduated	0 to 26
33640-67	Car tire tread depth gauge with case	0 to 11 (coloured area 0 to 1.6 mm according to EC standards 89.499)
S-4464-1	Stainless steel tire tread depth gauge with case	0 to 50
67077-67	EM stainless steel tire tread depth gauge with case	0 to 150
V1584	Tire tread depth gauge	0 to 27

TOOLS FOR VALVES

	Description	Cdmt
S-4392-2	Standard car and truck valve cap and core screwdriver tool (without skirt)	Per 10
S-4049-2	Standard car and truck valve cap and core screwdriver tool (with skirt)	Per 10
65028-68	Car and truck valve cap and core screwdriver tool (without skirt)	Per 10
65290-67	Car and truck valve cap and core screwdriver tool (with skirt)	Per unit
T66690	Standard valve core screwdriver tool with pre-set torque 0.40 N.m.	Per unit
S-4259-1	Core screwdriver and valve repair tool for repairing interior and exterior threads and removing broken cores	Per unit
R-0059-2	Core screwdriver tool also for performing minor repairs on the interior threads of car and truck valve mouths	Per unit
S-4282-1	Universal core screwdriver	Per unit
R-0769-1	OTR tool for repair of internal and external threading of valve connectors	Per unit
R-1255-1	Car and truck valve cap and core screwdriver tool	Per unit
R-1469-1	Valve core and cap screwdriver for earthmovers	Per unit
41-466	Valve removing tool ("DAUJY" type)	Per unit

TOOLS FOR VALVES

	Description
S-4032-1	Lever for mounting of car rubber snap-in tubeless valves (metal handle)
65027-67	Lever for mounting of car rubber snap-in tubeless valves (plastic handle)

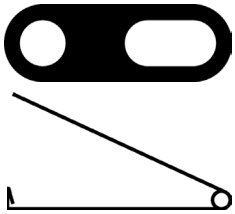

	Description	Quantity per pack
S-4723-2	"FEINE" plate	20
S-4724-2	"FEIMA" needle	20

SERVICE TOOLS

LEVERS

MICHELIN

P/N. Michelin range	Description	Hose (cm)	Weight (kg)	Use
R-0426-1 FACE	Lever for tubeless farm vehicle and truck tires on drop-centre rims (small tires)	53	1	
R-1289-1 FORCE	Lever for tubeless farm vehicle and truck tires on drop-centre rims (large section)	75	1,5	
R-0427-1 FIACRE	Lever for all truck tires with tube or tubeless on flat rims	45	1,2	
R-0428-1 FIFRE	Lever for all truck tires with tube or tubeless on flat rims	41,5	0,95	
R-1060-1 HALTE	Lever for tubeless truck tires mounted on 15" drop-centre rims	80	1,7	
R-0858-1 SAYAM	Lever for EM tires	95	2,7	
R-1194-1 HYOCA	Lever for lug base (double X) and EM tires on drop-centre rims	93,5	3,1	
R-1195-1 HYUDE	Lever for double X logging tires and OTR tires on drop-centre rims	99	2,9	
R-1230-1 FAGUS	Bead remover tool	139	11,5	
R-1547-1 MOTO	Specially for motorcycles	38	0,5	
R-0425-1 FUSIL	Lever for all tire types	38	0,5	

SCHRADER PACIFIC Tire Hardware Solutions

MISCELLANEOUS LEVERS

	Description	Hose (cm)	Weight (kg)
S-4798-1	Flat tire dismounting lever for LV/ HGV for automatic machine	50	0,6
33769-67	Flat tire removal lever, plastic liner for alloy rims	50	0,7
66815-67	Tire bead wire horn with soft head	30	1,9
65779-67	Car 4-way lug wrench 17-19-21 mm - 1/2" mâle	36	1,2
65485-67	Truck 4-way lug wrench 24-27-33 mm - 3/4" Male (*)	70	4,9
65804-67	Plastic truck bead block		
65803-67	Bead holder in chrome-plated steel with alloy rim protector for trucks, farm vehicles		1,8
69881-67	Set of 2 wedges for chrome-plated bead lock 65803-67		
61482-67	Plastic protector for edges of alloy rims		0.01

HANDLING

WHEEL TIGHTENING TORQUE WRENCHES

- We recommend annual calibration.
- Delivery with certificate of compliance
- Follow the user instructions

	65240-67	65778-67
Description	Car (square 1/2"). Ratchet system. Audible click. Locking of torque adjustment jack. Guaranteed accuracy of ± 4% of the reading on the scale (sold in plastic case)	Van and 4 x 4 (square 1/2") Accuracy ± 4%
Torque (N.m.)	40 to 200	40 pre-set
Weight (kg)	1.2	1.2
Length (mm)	513	435

- Secure handle locking
- Safety: tactile (short stroke triggering) and audible (click)
- Quick and safe adjustment of the desired value by turning the handle
- User-friendly reversible ratchet
- Integrated jack lever reducing accident and fault risks

	65241-67	61319-67
Description	Car (square 1/2") Ratchet system Audible click Locking of torque adjustment jack Guaranteed precision of ± 2% of the reading on the scale (sold in cardboardbox)	Can be separated into 3 parts with unlocking tool Indication accuracy: ± 4% of the value read on the scale (in the direction of tightening). Window for visual check of locking
Torque (N.m.)	300 to 800	800 to 2000
Weight (kg)	7.4	18
Length (mm)	1280	3033

	61516-67	61517-67
Description	Torque wrench for light vehicles	Torque wrench for truck
Couple (N.m.)	40 x 200	200 x 1000
Poids (kg)	1.53	6.52
Longueur (mm)	530	1240

SCHRADER PACIFIC
Tire Hardware Solutions

TROLLEYS AND WEDGES

471147HD	4711SPP	471147HD + 4711SPP
Smart Car	Extension for Smart Car	Smart Car with extension

61448-67	471105	471123	61447-67
Wedge 385x160x193 mm yellow polypropylene	Tire cart, capacity 220 kg	Tire cart with wheels, load 160 kg	Traffic cone 50 cm Plastic - fluorescent

LED HEADLAMP

V5540
Selectable modes to set pointed lighting or floodlighting • 3 W LED point focusing maximum 185 lm • 1.5 W COB LED with wide-angle illumination maximum 130 lm IP 54 3xpiles AAA 1,5 V Micro included

TOOLS FOR PERSONAL PROTECTION

Recommended for buffing and skiving.

SAFETY GLASSES

61484-67
High-protection glasses, adjustable arms treated against scratches, single-screen with side protectors.

SAFETY GLOVES

61350-67	61523-67	61524-67	61529-67
Cut-resistant sleeve ARACUT SLEEVE II, one size fits all.	Tear-proof repair gloves, size 9	Tear-proof repair gloves, size 10	Box of 100 XL gloves
Knit sleeve with 2-ply Kevlar®, thumb hole. Leather reinforcement on forearm L. = 36 cm	Dyneema®/ Lycra seamless knit®/ grey printed polyester, induction polyurethane on palm and fingertips. Aerated back. Elastic sleeves. Colours: printed, induction grey. Length: 25 cm		Box of 100 X-large gloves

3M VERSAFLO

61321-67	61349-67	61348-67	61351-67
Complete 3M VERSAFLO TR315E+ kit recommended for powered-air respiratory protection against dust.	Set of 5 replacement filters for 61531-67	Dust mask FFP2 S Light grey protective head covering T M/L	High-capacity 10 to 12-hr battery for Versaflo TR-300
Includes filtration unit, particulate filter, pre-filter, battery (10 to 12-hr battery life), charger, hose and flowrate indicator			

VEHICLE PROTECTION

		Description	Dimensions	Parts / box	Information
	61271-67	Tire bag	Th. 50 µm, 70 x 30 x 100 cm Thickness compliant with new regulations (article 75-I of the Energy Transition for Green Growth law, modifying article L.541-10-5 of the environmental code).	100	Possible personalization starting with 5,000 bags. Contact us.
	61274-67	Plastic seat covers in dispenser		1 roll of 500	Possible personalization starting with 5,000 covers. Contact us.
	5995753	Clean set 5 in 1	Kit contents: - seat cover (16 µ) - anti-slip floor mat (coated paper 80 gram) - steering wheel cover (25 µ) - gear shift cover (18 µ) - hand brake cover (18 µ)	100	
	61286-67	Steering wheel protector	-	250	-
	61273-67	Black reusable PVC seat cover	85 x 135 cm	1	Note: not suitable for seats made of light coloured leather

MOUNTING AND DISMOUNTING OF EARTHMOVER TIRES

All tools for mounting and dismounting of earthmover tires, in a workshop or on site.
• Installation and commissioning of complete tire workshops up to 63"
• Bead breakers for wheels in 1,3 and 5 parts
• Tooling for the installation of seals.
• Jacks, lifting bags and accessories.

TECHNICAL SUPPORT AND TRAINING

Our TRAINING CENTRE was established to provide our clients with the skills required to use the product line produced by Schrader S.A.S. for the assembly and disassembly of agricultural, HGV and OTR tires, using 1, 3 and 5 piece wheels.
To help with the disassembly, Schrader S.A.S. offers a wide range of tools dedicated to different tasks in accordance with safety guidelines and rules.

EARTHMOVER EQUIPMENT

- Technical support and training 202
- Jack Mammut 203
- Lifting airbags ..... 204 - 205
- Wedging 205
- Air hydraulic and manual pumps ..... 207 - 208
- Distributors, hoses and hydraulic oil ..... 210 - 211
- Hydraulic connections ..... 212 - 215
- Tools for 1-piece rims :
  - Bead-breakers : MINI-KOUSMA, COMPACT 216
  - Bead-breakers : US TYPE, MANUAL 117
- Tools for 3-piece rims:
  - . Bead-breakers : PASCHRA, KOUSMA ..... 218 - 219
  - . Bead-breakers : MAXI-KOUSMA, TYPE US 220
- Tools for 5-piece rims :
  - . Jacks: BIGMA, SMALLMA 221
  - . Jacks: SHUTTLE-T, MAGMA, SMALL, BIG ..... 222 - 223
  - . Jacks: SAYMA, POUSMA 224
- OTR tire tools and wedges 225
- BARJUKY2® dismounting set ..... 226 - 227
- FM dismounting set 228
- AE service set 229
- Seals 230
- Tool guide ..... 232 - 233

INTRODUCTION TO WHEEL REMOVAL
1, 3 and 5-piece

In the case of earthmovers,for punctures or tire changing, in most cases, the wheels are not removed. The tires are removed directly from the rims.

There are three main types of wheel, which often take a long time to dismount and are very heavy, making them difficult to handle.

WHEEL TYPES

- Single-piece hollow based wheels
- Three-piece wheels
- Five-piece wheels

1-piece rim
(single piece, drop-centre)

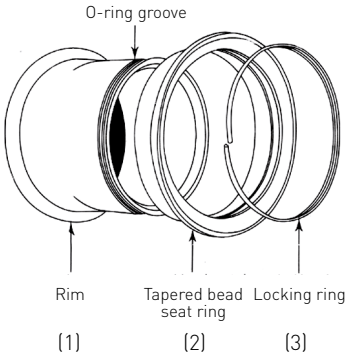

Different elements of a 3-piece rim.

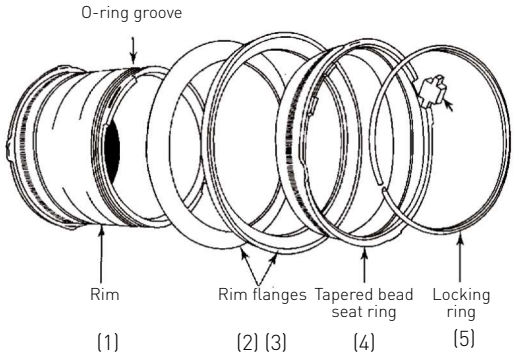

Different elements of a 5-piece rim.

SAFETY PRECAUTIONS FOR ALL TYPES OF ASSEMBLY

- Operators must wear protective clothes:

helmet, glasses, gloves, safety shoes, ear muffs.
- The vehicle's engine must be turned off. Make sure the locking rod is in position (hinged vehicles).
- Choose the appropriate lifting material considering the type and weight of the vehicle. Always fix the lifted vehicle with a prop. Always chock a lifted vehicle.
- Maintenance of metal parts should not be done manually.
- Work in pairs and with lifting equipment to guarantee safety.
- Tires must always be entirely deflated before any operation.

In the case of working on twin wheels, both tires must be deflated to prevent any material falling which might be stuck between the tires.
Make sure that all parts of the rim are in good shape and are compatible with each other.
- During the operation, the operator must check the state of the rim and tire to make sure that no part needs to be scrapped (ex, cracks).
- A tire should not be reassembled until wheel, rim, rings or flanges have been properly cleaned and greased (neither the "O" ring groove nor the flange groove must be greased).

NEVER STAY CLOSE TO A TOOL WHILE IT IS IN USE

CHOICE OF DISMANTLING TOOLS

- With 1 or 3-piece rims, a bead breaker is used. This tool will grip the rim or the wheel and push the bead wire.
- In the case of 5-piece rims, ring breakers are used to grip the notches of the conical rings.
- In some cases, Schrader S.A.S. has developed a special tool range.
- The tools are used with 700 bar air hydraulic or manual pumps.

Boxes and tools are available from SCHRADER S.A.S for all possible requirements. These have been extensively tested by a wide range of manufacturers for many years and have proved their reliability throughout the world.
Tire specialists should select the most suitable toolbox or tool for their project requirements and in accordance with the machinery used.

Follow the tool's user instructions.

SCHRADER PACIFIC Tire Hardware Solutions

TECHNICAL SUPPORT AND TRAINING

Formation in workshop or on fields.

Our TRAINING CENTRE was established to provide our customers with the necessary skills in the correct use of Schrader Pacific Tire Hardware Solutions products.
- for the mounting and removal of 1, 3 and 5-piece truck, agricultural and earthmover tires.
- in the installation and use of the "OTR-TPMS" system for monitoring the pressure and temperature of earthmover tires.

Our training centre is approved for occupational training.
. Declaration registered under No. 43 25 01928 25 with the Prefect of the Franche-Comté Region.

Technical Course:
GENERAL KNOWLEDGE ON EARTHMOVERS & MOUNTING/DISMOUNTING OF EARTHMOVER TIRES on 1, 3 and 5-piece rims

Staff aimed at:
Anyone employed in a company in a position requiring in-depth knowledge of how to mount and dismount earthmover tires.

To enrol,
contact our sales team.

Aims:
- General knowledge of the vehicle
- Detailed knowledge of tire mounting, dismounting and handling
- Practical training on the maintenance and mounting and dismounting of earthmover tires
- Safety rules
- Simulations at our Schrader Pacific Tire Hardware Solutions training centres

LIFTING AIRBAGS

PNEUMATIC LIFTING AIRBAGS

• Place a plate under the airbag.

	66531-67	66532-67	66533-67	66534-67	66535-67
Model	CLT3	CLT24	CLT30	CLT43	CLT65
Lifting capacity (T)	3	24	30	43	65
L. x W (cm)	20 x 20	56 x 56	62 x 62	75 x 75	92 x 92
Max stroke (mm)	115	315	345	410	500
Net weight (kg)	1	9	10	15	22
Recommended plate	-	65978-67	65978-67	65979-67	65979-67
stroke	Lifting force in tons at 8 bar				
28 mm	3	24	30	43	65
50 mm	1.4	17.5	24	33	56
100 mm	0.7	11.5	18	25.5	44
150 mm	0	7.5	12.5	19	35
200 mm		3.5	7	13	26
250 mm		1	2.5	7	16.5
300 mm		0.1	1	3.5	10
350 mm		0	0	1	5.5
400 mm				0	3
450 mm					1.5
500 mm					0

• The pneumatic lifting airbags are chiefly used for very low machines where there is not enough space for a jack.
They are used also to facilitate the lifting of earthmover vehicles in site operations.
• Non-slip surface for safe stacking of airbags.
• Easy location of the central point, facilitating positioning under load.
• Max operating pressure: 8 bar.
• Note that the bigger the airbag gets, the less lifting power it has.
• Other possible airbags: Contact us.

BOXES AND TUBES

	66538-67	66539-67	66536-67	66537-67
	Quick-connection feeder hoses		Regulating cabinet	
Graduation			0 to 10 bar 0 to 140 psi	0 to 10 bar 0 to 140 psi
Characteristics	L. 10 m, red	L. 10 m, blue	1 output	2 outputs

FDS
- Lifting recommended with braked wheel
- Avoid contact with hydrocarbons
- Fix the lifted vehicle with a prop

SCHRADER PACIFIC
Tire Hardware Solutions

BLOCKING

PLASTIC WEDGES

- Unbreakable even under stress from the most severe loads.
- Waterproof, imperishable, stay light whatever the weather.
- Very long life.
- Easy maintenance.
- Gripping handles.
- Easy cleaning under high-pressure jet.
- Resistant to most chemicals.
- Can be used from -100 to +80°C.
- 100% recycled and recyclable: environmentally friendly.
- Slip-proof treatment.
- Maximum pressure before permanent deformation of the material (without breaking): 3,800 N.

	65917-67	65918-67	65919-67	65978-67	65979-67
Dimensions (mm)	495 x 245 x 100	745 x 245 x 100	600 x 400 x 25	Distribution plate, 700 x 700 x 15 for lifting pad	Distribution plate 1000 x 1000 x 15 for lifting pad
Weight (Kg)	11.7	17.5	5	7.3	15
Load capacity (T)	11	16	8	15	22

	65967-67	65968-67	65969-67
Set of blocks	8 blocks (6 x 65917-67 + 2 x 65918-67)	8 blocks (7 x 65917-67 + 1 x 65919-67)	10 blocks (5 x 65917-67 + 4 x 65918-67 + 1 x 65919-67)

LIFTING JACKS

- Use with Air driven hydraulic pumps 700 bar.
- Suffix 67: pumps equipped with quick connect coupler 67072-67.
- Suffix 99: pumps equipped with screw connection 67065-67.

	67080-67 67080-99	67082-67 67082-99	65867-67 65867-99	67085-67 67085-99	67087-67 67087-99	67089-67
Model	Aluminium jack LUKAS 27	Aluminium jack LUKAS 66	Aluminium jack LUKAS 107	Steel jack VERAC 23	Steel jack VERAC 54	Load distribution base 40 x 25 cm
Min height (mm)	280	350	370	270	270	
Stroke (mm)	150	200	200	150	150	
Force at 700 bars (T)	27	66	107	23	54	
Weight (kg)	6.1	15	26	11	25	-
Required pump	65431	65441	66809	65431	65441	-

Sold without eyelet - Locking system with mechanical rod.
Transport base for over 150 T

	65798-67
Description	Set of 3 steel risers for lifting jacks up to a max of 55 T Heights 75 mm, 150 mm, 230 mm To be used separately or stacked/interlocked to move the jack as close as possible to the vehicle
Weight (kg)	55

JACK MAMMUT

	61394-67
Model	M80-31
Capacity (T)	80 - 50 - 25
Weight (kg)	138
Working air pressure (bar)	10-12
Air consumption (nl/min)	600
Max stroke. (mm)	518
Height min (mm)	341
Height max (mm)	859
Number of pistons	3
Pistons stroke (mm)	167 - 171 - 180

PUMPS

HYDRAULIC PUMPS

• Air driven hydraulic pumps 700 bar.
• Pumps delivered with nipple and particle filter mounted.
• Maximum air inlet pressure in the pump : 7 bar.
• Use a filtering nipple 65491-67.
Use a Filter-Regulator-Lubricator on the compressor outlet.
• Lubricant for pneumatic tools.

• Suffix 67: pumps equipped with quick connect coupler 67069-67.
• Suffix 99: pumps equipped with screw connection 67067-67.

It is recommended to use the extension option along with the preset line regulator reference 65579-67 to limit pressure and fouling, as well as the quick filtering nozzle 65491-67.

	65431-00 (1)	65441-00 (1)	66809-00 (1)
	Pump alone 1.3L Without fittings	Pump alone 2.5L Without fittings	Pump alone 4L Without fittings
	65431-67 (2)	**65441-67 (2)**	**66809-99 (2)**
	Complete pump 1.3L with quick connector, 2.5m hose, cap, and air connector	Complete pump 2.5L with quick connector, 3.6m hose, cap, and air connector	Complete 4L pump with quick connector, 2.5m hose, cap, and air connector.
	65431-99 (3)	**65441-99 (3)**	
	Complete 1.3L pump with screw connector, 3.6m hose, cap, and air connector.	Complete 2.5L pump with screw connector, 3.6m hose, cap, and air connector.	
Capacity (L.)	1.3	2.5	4
Dimensions (cm)	28 x 13 x 21	31 x 18 x 21	32 x 32 x 21
Weight of pump alone (kg)	9	9.6	13
Weight of complete pump (kg)	9.9	12.2	13.9

65491-67	Filtering nipple 1/4" Gas BSP
66812-67	Filter for adaptor 65491-67

SCHRADER PACIFIC Tire Hardware Solutions

PUMPS KIT

	65431-EU
Content	1 hydro-pneumatic pump 1,3L **65431-00** 1 anti-whiplash hose 2.5 m long with quick connect coupler and screw connection **65726-99** 1 tared pressure regulator G1/4 female **65579-67**

	65441-EU
Content	1 hydro-pneumatic pump 2,5L **65441-00** 1 tared pressure regulator G1/4 female **65579-67**

MANUAL HYDRAULIC PUMPS

	61292-67 61292-99
Description	Foot pump with manual control, 1 speed
Tank volume (l)	0.8
Length (mm)	580
Width (mm)	155
Height (mm)	145
Total height (mm)	480
Weight (kg)	8
Pression (bar)	700
Flowrate (cm3 / coup)	2.5

DISTRIBUTORS, 700 BAR HOSES AND HYDRAULIC OIL

• For PHP and PHM pumps. • Service pressure at 700 bar. • Hose bursting pressure 2800 bar.

HYDRAULIC DISTRIBUTORS

Allows for simultaneous use of 1 to 4 jacks

66725-67
Hydraulic distributor VIA 4V "Hydro-Max4" for bead breakers

*Use with 4L pump (66809-00 /66809-99)

HYDRAULIC OIL

66105-67
Hydraulic oil Velocite n° 6, 5-L can.
FDS

Expiry date: 5 years after the date of manufacture.

SCHRADER PACIFIC Tire Hardware Solutions

COMPLETE HYDRAULIC HOSES

	65957-67	R-1614-1	65496-67	65932-67
Length (m)	2.50	3.60	2.50	3.60
Ends	Male 3/8 NPT and G 1/4 quick connect coupler		Male 3/8 NPT and G 3/8 screw-on coupler	
Use	Pump 65431-67	Pump 65441-67	Pump 65431-99	Pump 65441-99

ANTI-WHIPLASH HOSES

	65726-67 (2.5m hose) 66024-67 (3.6m hose)	65726-99 (2.5m hose) 66024-99 (3.6m hose)
Description	**Anti-whiplash hose with swivel connector, 2.5 m or 3.6 m long and quick connect coupler**	**Anti-whiplash hose with swivel connector, 2.5 m or 3.6 m long and screw connection**
Content	1 anti-whiplash hose 2.5 m alone **65726-00** or 1 anti-whiplash hose 3.6 m alone 1 screw connector **66883-67** 1 adaptor female 3/8 male ¼ **67241-67** 1 coupler 700 bar F 1/4G **67069-67** 1 male cap for coupler **67071-67** 2 metalplastic seals **61446-67**	1 anti-whiplash hose 2.5 m alone **65726-00** or 1 anti-whiplash hose 3.6 m alone 1 swivel hydraulic connector **66883-67** 1 coupler 700 bar F 3/8NPT **67047-67** 1 female cap for coupler **67068-67**

HYDRAULIC CONNECTIONS

700 BAR HYDRAULIC CONNECTORS

66881-67	66882-67	66883-67
M1/4 NPT-F1/4 NPT for mounting of the swivel fitting directly on the MAGMA, COMPACT and SHUTTLE-T tools	M3/8 NPT-F3/8 NPT for mounting of the swivel fitting directly on an PHP pump suffix 99	M3/8 NPT-F 1/4G for mounting of the swivel fitting directly on an PHP pump suffix 67

Pump side **Tool side**

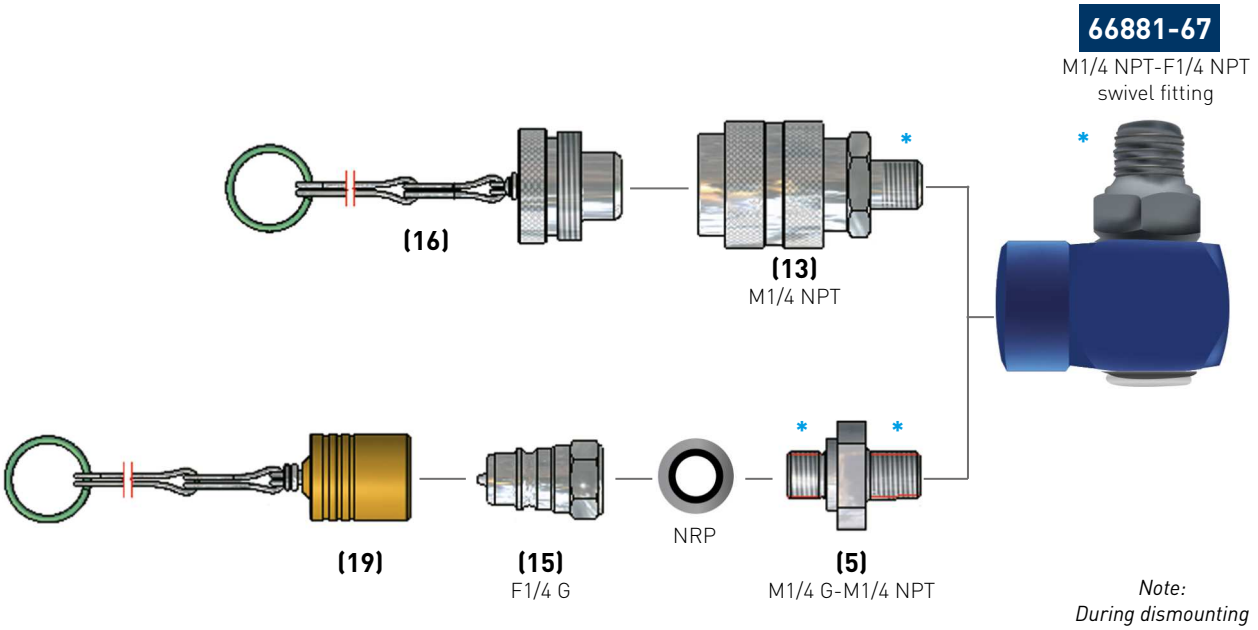

Note:
During dismounting of the fitting on a tool, clean the impurities from the threads before putting on the swivel fitting.

* *Assemble using Loctite thread sealant*

SCHRADER PACIFIC
Tire Hardware Solutions

Pump side

Fittings to be ordered according to the type of pump tube

Tool side

Fittings sold with the tool

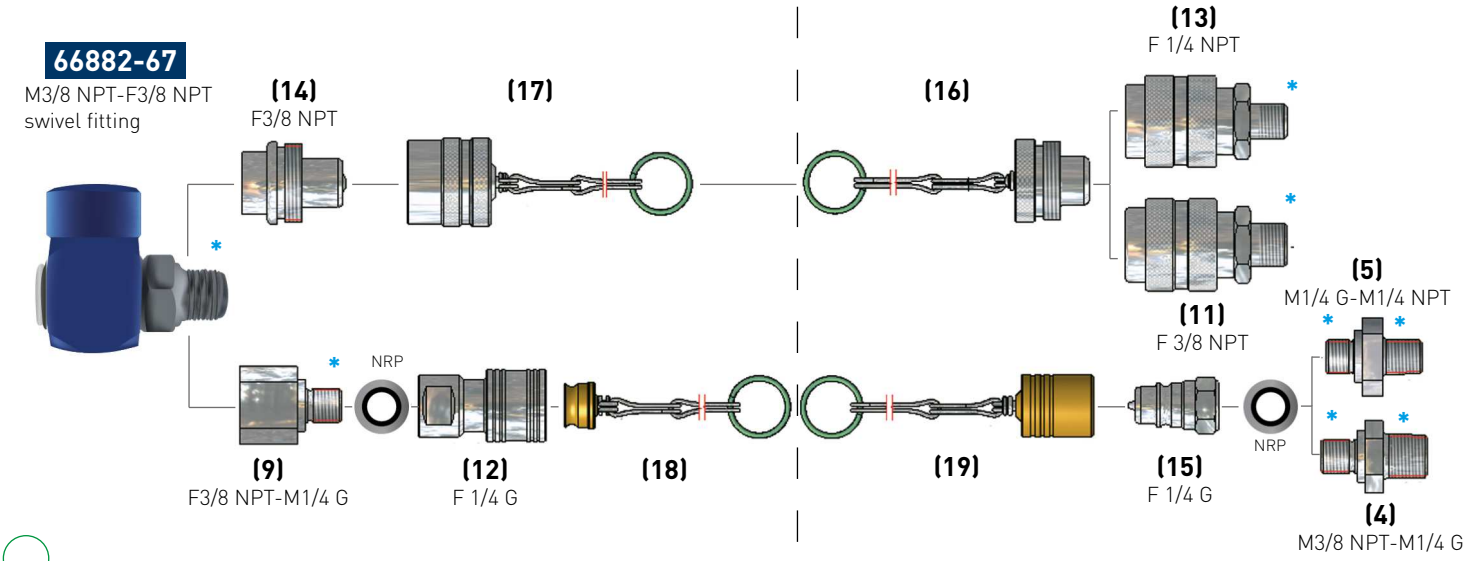

Note:
During dismounting of the fitting on a tool, clean the impurities from the threads before putting on the swivel fitting.

* *Assemble using Loctite thread sealant*

Pump side

Fittings to be ordered according to the type of pump hose

Tool side

Fittings sold with the tool

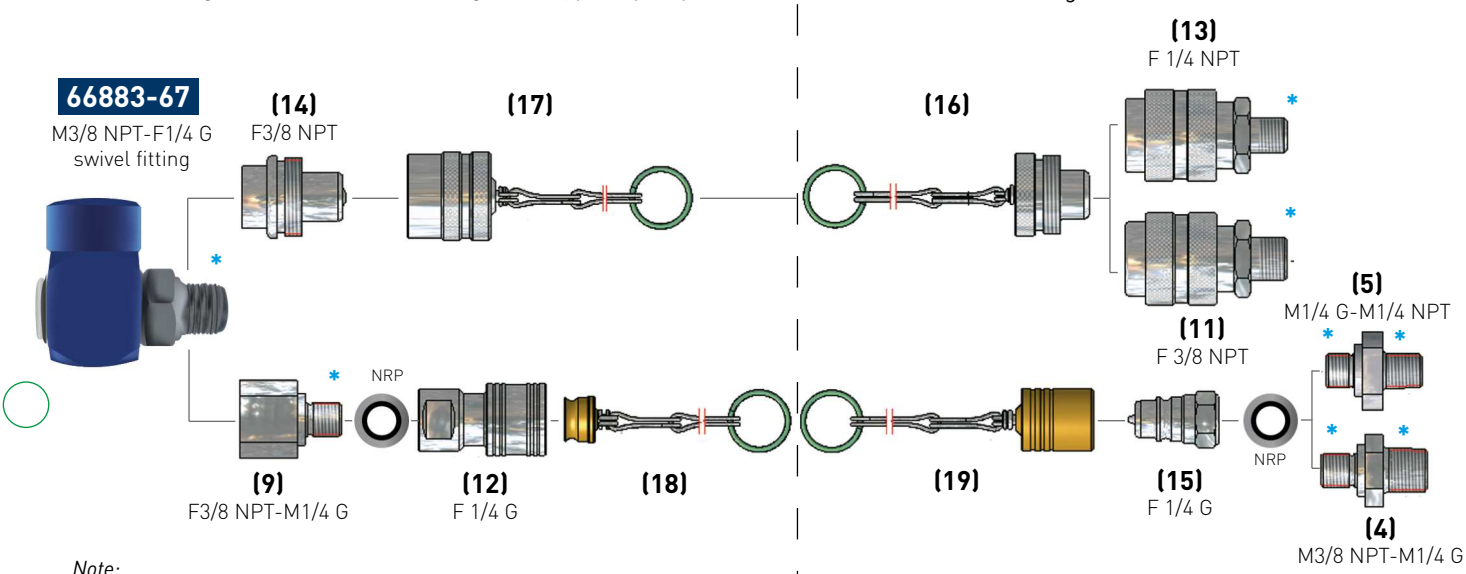

Note:
During dismounting of the fitting on a tool, clean the impurities from the threads before putting on the swivel fitting.

* *Assemble using Loctite thread sealant*

67074-67	67240-67	67241-67	67065-67	67069-67	65296-67	67067-67
(4)	(5)	(9)	(11)	(12)	(13)	(14)
M3/8 NPT - M1/4 G adaptor	M1/4 G - M1/4 NPT fitting	F3/8 NPT - M1/4 G adaptor	700 bar screw-on coupling, F., threading 3/8 NPT	700 bar quick-connect coupling, F., threading 1/4 G	700 bar coupling for screwing on, F., 1/4 NPT	700 bar fitting for screwing on, F., 3/8 NPT

67072-67	67066-67	67068-67	67071-67	67073-67
(15)	(16)	(17)	(18)	(19)
700 bar quick-connect fitting, F., 1/4 G	M cap for 67065-67	F cap for 67067-67	M cap for 67069-67	F cap for 67072-67

700 BAR HYDRAULIC CONNECTIONS

Assembly on tools

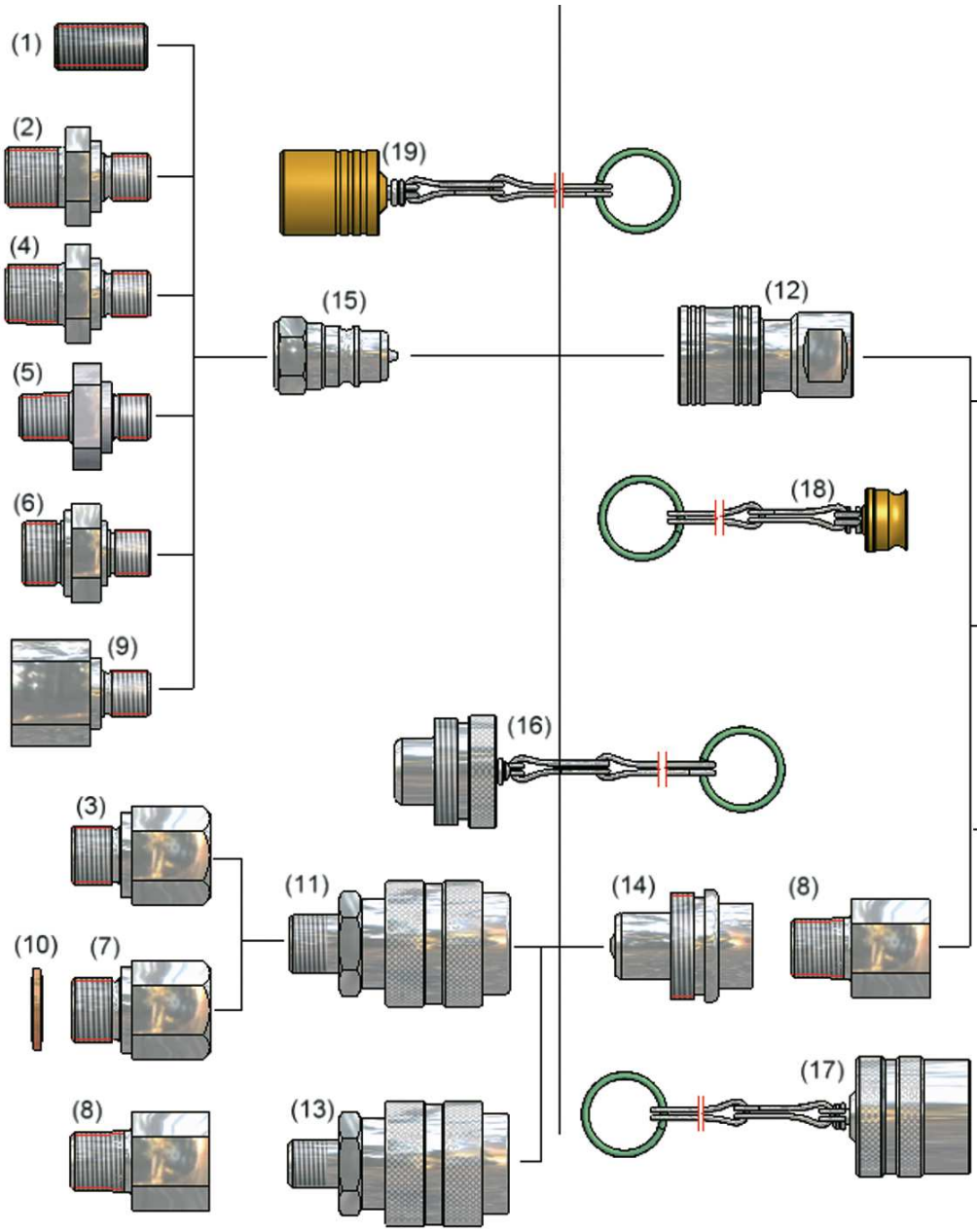

65591-67	65852-67	65853-67	67074-67	67240-67	67075-67	67076-67
(1)	(2)	(3)	(4)	(5)	(6)	(7)
M1/4 G - M1/4 G adaptor	M3/8 G - M1/4 G adaptor	M3/8 G - F3/8 NPT connector	M3/8 NPT - M1/4 G adaptor	M1/4 G - M1/4 NPT connector	M18 x 1.5 - M1/4 G adaptor (gasket 67048-67 ordered separately)	M18 x 1.5 - F3/8 NPT adaptor (seal 67048-67 ordered separately)

67149-67	67241-67	67048-67	67065-67	67069-67	65296-67	67067-67
(8)	(9)	(10)	(11)	(12)	(13)	(14)
M3/8 NPT - F1/4 G connector	F3/8 NPT - M1/4 G adaptor	Copper seal, 18	700 bar screw-on coupling, F., threading 3/8 NPT	700 bar quick-connect coupling, F., threading 1/4 G	700 bar screw-on coupling, F., 1/4 NPT	700 bar screw-on fitting, F., 3/8 NPT

SCHRADER PACIFIC Tire Hardware Solutions

Assembly on pumps

- The LUKAS, VERAC, PASCHRA, US, BIGMA, SMALLMA, BIG, SMALL, SAYMA, POUSMA, DISMA and LESMA tools, and the pumps, have, 3/8" NPT threading.
- The COMPACT, SHUTTLE and SHUTTLE-T tools have 1/4" NPT threading.

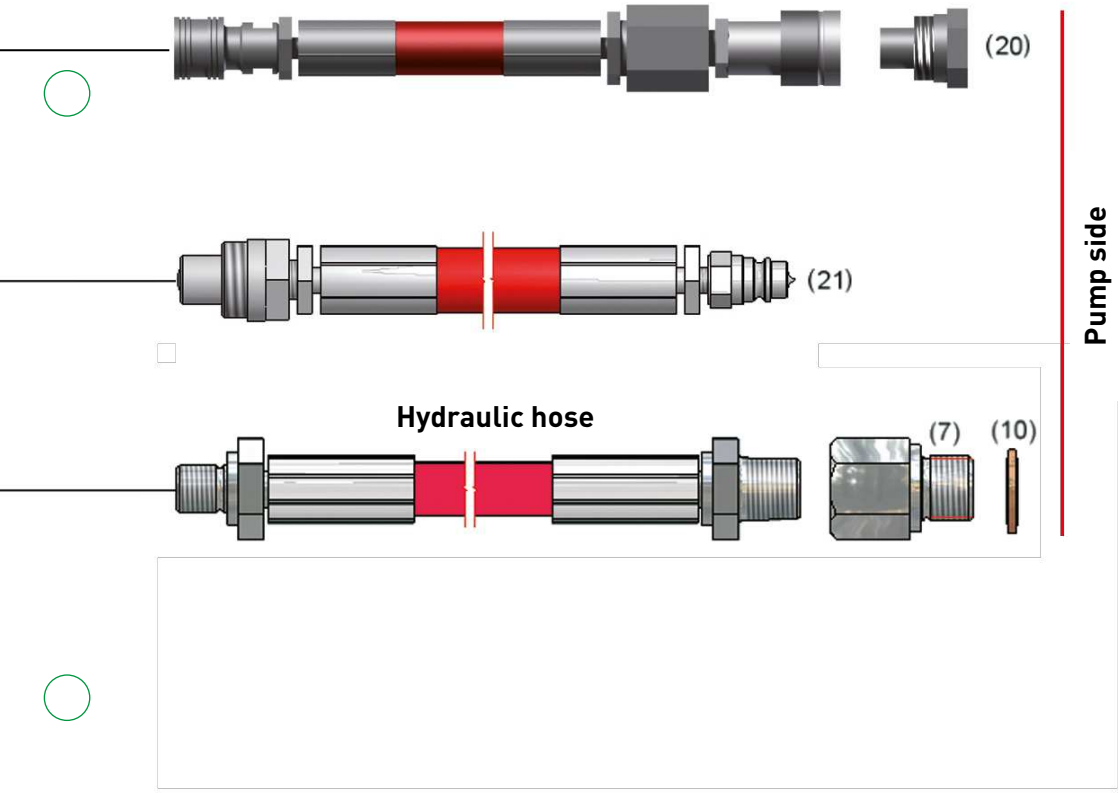

67072-67	67066-67	67068-67	67071-67	67073-67	65992-67	65993-67
(15)	(16)	(17)	(18)	(19)	(20)	(21)
700 bar quick-connect fitting, F., 1/4 G	M cap for 67065-67	F cap for 67067-67	M cap for 67069-67	F cap for 67072-67	Connector adaptor to be screwed on towards the quick-connect fitting	Quick-connect adaptor towards connector to be screwed on

SETS: CONNECTORS + CAPS

67145-67	67147-67	67148-67	66821-67
67065 + 67066	67069 + 67071	67072 + 67073	67240 + 67072 + 67073

TOOLS FOR 1-PIECE RIMS

Operators must always wear the correct clothes and the PPE appropriate for each job: helmet, glasses, protective gloves, safety boots and ear protection.
We recommend the glasses and gloves presented on page page 198.

These tools must be used with a 700 bar manual or air hydraulic pump.
• Never stay close to machine tool when operating.

• Suffix 67: tools equipped with quick connect coupler 67072-67.
• Suffix 99: tools equipped with screw connection 67065-67.

"US" TYPE BEAD BREAKER

	67030-67 67030-99	67037-67
Intended use	1-piece rim	Earthmover hook only for transformation for use on 3-piece rims
Net weight (kg)	14.5	
Cylinder stroke (mm)	95	
Power at 700 bar (T.)	9	
Spade length (mm)	35	
Dimensions (cm)	42 x 28 x 12	

MANUAL BEAD BREAKER

• Do not use with impact wrench.
• Use with a ratchet wherever possible.

	65802-67	61444-67
Intended use	Farm and industrial vehicle wheels up to 38" with max 14 ply	Pneumatic Bead Breaker
Net weight (kg)	6.4	4.6
Dimensions (cm)	26 x 15 x 11	38

"COMPACT" AND "SUPER COMPACT" BEAD BREAKERS

	65071-97	61193-97
Intended use	Tool built in steel and aluminium for high reliability and low weight For dismounting of all types of tires: Jeep, 4x4, light vehicle, truck (rims without anti-puncture edge) and tractor	
Maximum tire dimensions	All rims with flat edges	
Net weight (kg)	4.7	5.5
Cylinder stroke (mm)	40	70
Power at 700 bar (T.)	2.83	4.9
Tight power (T.)	0.76 to 1.78	1.6 to 2.2
Spade length (mm)	35	35
Dimensions (cm)	17 x 17 x 17	22 x 22 x 23

"MINI-KOUSMA" BEAD BREAKER

Adjustable claw

	66014-97
Intended use	Tool made of steel and aluminium for high level of reliability and reduced weight For rims with up to Ø 24''
Net weight (kg)	8.7
Cylinder stroke (mm)	100
Power at 700 bar (T.)	2.83
Tight power (T.)	2.12 to 4.95
Spade length (mm)	43
Dimensions (cm)	50 x 11 x 32

COFFRETS VÉRIN VIKING

	61534-67
Destination	Coffret vérin Viking comportant une pompe de dimensions 43x14,5x10,5 cm pour un poids de 4,9kg, avec une pression maximale de 400 bar
Poids net (kg)	6.40
Nombre de cales	1
Dimensions (cm)	430 x 10.5 x 14.50

TOOLS FOR 3-PIECE RIMS

Operators must always wear the correct clothes and the PPE appropriate for each job: helmet, glasses, protective gloves, safety boots and ear protection.
We recommend the glasses and gloves presented on page page 198.

"PASCHRA" BEAD BREAKER

	65187-Q7 65187-Q9	65267-Q7 65267-Q9
Intended use	3-piece rims of 23.5 R 25 up to 29.5 R 29	Complete box: PASCHRA + wedges + keys
Net weight (kg)	9.6	9.6
Cylinder stroke (mm)	150	-
Power at 700 bar (T.)	11	-
Tight power (T.)	0.95	-
Spade length (mm)	110	-
Dimensions (cm)	44 x 15 x 15	46 x 32 x 15

"PASCHRA LONG" BEAD BREAKER

	61293-Q7 61293-Q9	65488-67
Intended use	3-piece rims (clamps ordered separately) Suitable for open-centre or closed-centre wheels larger than 3.5"	rod connector + claw + screw for PASCHRA
Net weight (kg)	8.4	
Tightening of fastening screws	Mini: 7 da.N - Maxi: 8 da.N.	
Cylinder stroke (mm)	250	
Power at 700 bar (T.)	11	
Tight power (T.)	0.95	
Spade length (mm)	110	
Dimensions (cm)	44 x 15 x 15	

SCHRADER PACIFIC
Tire Hardware Solutions

- These tools must be used with a 700 bar manual or hydropneumatic pump.
- Never stand behind a tool during use.

- Suffix Q7: tools equipped with quick-connector 67072-67.
- Suffix Q9: tools equipped with screw-on connector 67065-67.
- Suffix 97: tools equipped with a screw-on connector installed on the tool and quick connector. Sold separately in box.

"SKYMA" BEAD BREAKER

Adjustable claw

	66995-97
Intended use	Tool built in steel and aluminium for high reliability and low weight Rims up to Ø 24'' specially designed for crane tires
Net weight (kg)	8.9 (without connector)
Cylinder stroke (mm)	70
Power at 700 bar (T.)	2,830
Tight power (T.)	2,120 to 4,950
Spade length (mm)	43
Dimensions (cm)	50 x 11 x 32

"KOUSMA" BEAD BREAKER

Adjustable claw

	66015-97	66049-67
Intended use	Tool built in steel and aluminium for high reliability and low weight Rims up to Ø 29'' Max hooking height 3.5''	Spare flat hook option for 66015-97
Net weight (kg)	13.2	
Cylinder stroke (mm)	114	
Power at 700 bar (T.)	4,536	
Tight power (T.)	3.4 to 7.93	
Spade length (mm)	75	
Dimensions (cm)	57 x 11 x 35	

TOOLS FOR 3-PIECE RIMS

HQ

Operators must always wear the correct clothes and the PPE appropriate for each job: helmet, glasses, protective gloves, safety boots and ear protection.
We recommend the glasses and gloves presented on page page 198.

"MAXI-KOUSMA" BEAD-BREAKER

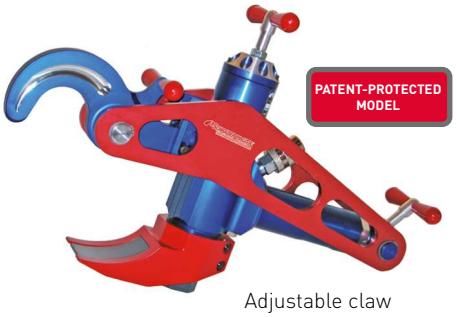

Adjustable claw

	66016-97	66049-67
Intended use	Tool built in steel and aluminium for high reliability and low weight High-flange rims up to Ø 29''. At a maximum flange height 3.5''	Spare flat hook option for 66016-97 and 61261-97
Net weight (kg)	13.5	
Cylinder stroke (mm)	114	
Power at 700 bar (T.)	4,536	
Tight power (T.)	3.4 to 7.93	
Spade length (mm)	100	
Dimensions (cm)	57 x 11 x 36	

"US-TYPE "BEAD BREAKER

	67036-67 67036-99	67037-67
Intended use	Agricultural, logging, public works and construction (OTR) machine tires, 3-piece rims	Hook for OTR tires only for 67036-67
Net weight (kg)	17	
Bead breaker stroke (mm)	95	
Power at 700 bar (T.)	9	
Spade length (mm)	35	
Dimensions (cm)	42 x 32 x 15	

TOOLS FOR 5-PIECE RIMS

HQ

- These tools must be used with a 700 bar manual or air hydraulic pump.
- Never stay close to machine tool when operating.

- Suffix 67: tools equipped with quick connect coupler 67072-67.
- Suffix 99: tools equipped with screw connection 67065-67.

"SUPER-KOUSMA" BEAD-BREAKER

	61261-97	66049-67
Intended use	Tool built in steel and aluminium for high reliability and low weight. For 3- to 5-piece earth-moving vehicle tires up to 35" without eyelets and without groove	Flat hook option for 66016-97 and 61261-97
Net weight (kg)	15.5	
Cylinder stroke (mm)	70	
Power at 700 bar (T.)	12.6	
Tight power (T.)	6.2 to 9.7	
Spade length (mm)	130	
Dimensions (cm)	57 x 11 x 36	

"BIGMA" RINGBREAKER

	67018-67 67018-99	67025-67 67025-99	67023-67	67024-67
Intended use	Spring return	Complete box contents: BIGMA ringbreaker + 2 hooks, 1 support, 4 ring wedges 67029-67, BTR key of 14	Standard hook	Narrow hook
Cylinder stroke (mm)	90			
Power at 700 bar (T.)	13.7			
Net weight (kg)	7.9	14		
Dimensions (cm)	41 X 15 X 10	39 x 17 x 12		

TOOLS FOR 5-PIECE RIMS

HQ

Operators must always wear the correct clothes and the PPE appropriate for each job: helmet, glasses, protective gloves, safety boots and ear protection.
We recommend the glasses and gloves presented on page page 198.

- Jacks easy to handle, designed by Schrader S.A.S., can be used on the interior and exterior of the rim.
- Turning parts, very light with high-resistance hooks.
- High-power tools.

"MAXI MAGMA" RINGBREAKER 27T

	61201-97
Intended use	Tool built in steel and aluminium for high reliability and low weight. For all types of rims with good anchoring on 2 sides, from 35" to 63" Large and medium rims of earth-moving vehicle tires and 6 parts, titan SVM-OVM 63"
Net weight (kg)	17.5
Cylinder stroke (mm)	150
Power at 700 bar (T.)	27
Tight power (T.)	6.2 to 9.7
Dimensions (cm)	19x19x45

"MAGMA 2" RINGBREAKER

360° rotating coupler

	61358-97	66851-67	61203-67
Intended use	Tool built in steel and aluminium for high reliability and low weight Recommended for inner side and outer side of the rim.	Spare claw	Holder for MAGMA / MAXI MAGMA
Cylinder stroke (mm)	150		
Power at 700 bar (T.)	20		
Net weight (kg)	12		
Dimensions (cm)	17 x 14 x 41		

SCHRADER PACIFIC Tire Hardware Solutions

- These tools must be used with a 700 bar manual or hydropneumatic pump.
- Never stand behind a tool during use.

- Suffix 67: tools equipped with quick-connector 67072-67.
- Suffix 99: tools equipped with screw-on connector 67065-67.
- Suffix 97: tools equipped with a screw-on connector installed on the tool and quick connector, sold separately in box.

"SHUTTLE-T" RINGBREAKER

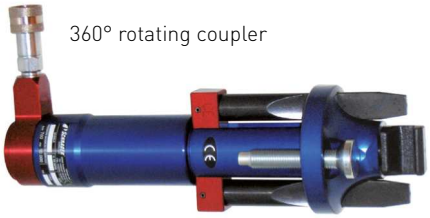

	66017-97	60396-67	60398-67	65605-67
Intended use	Tool built in steel and aluminium for high reliability and low weight Recommended for inner side and outer side of the rim. Jack delivered with (see picture): • 1 short hook mounted (60398-67) • 2 extension wedges (60396-67) • 1 long hook (65605-67) • 1 milled short hook	Spare extension wedge	Spare short hook, L = 40 mm	Spare long hook, L = 65 mm
Cylinder stroke (mm)	80			
Power at 700 bar (T.)	13.7			
Net weight (kg)	6.8			
Dimensions (cm)	Ø 13 x 43			

RINGBREAKERS

Spring return	67012-67 67012-99	67016-67 67016-99	67017-67
	SMALL	BIG	Hook for "SMALL" and "BIG" bead breakers
Intended use	Recommended for use on interior side		
Cylinder stroke (mm)	50	95	
Power at 700 bar (T.)	12	12	
Net weight (kg)	10	13.4	
Dimensions (cm)	35 X 11 X 13	44 x 11 x 12	

TOOLS FOR 5-PIECE RIMS

Operators must always wear the correct clothes and the PPE appropriate for each job: helmet, glasses, protective gloves, safety boots and ear protection.
We recommend the glasses and gloves presented on page page 198.

"SAYMA-2" RINGBREAKER

INTENSIVE USE

	66985-Q7 66985-Q9	66986-67
Intended use	SAYMA-2 with supplied wedges	Set of 3 magnetic extensions for SAYMA-2 bead breaker Extension No.1: 100 mm // 1 kg Extension No.2: 50 mm // 0.5 kg Extension No.3: 25 mm // 0.3 kg
Cylinder stroke (mm)	50	
Power at 700 bar (T.)	12	
Net weight (kg)	2.5 complete	
Dimensions (cm)	14 x 16 x Ø 8	

"TALLMA" MAGNETIC WEDGES AND BEAD BREAKER

	61297-97
Intended use	TALLMA for 3- to 5-piece rims, magnetic wedges included
Cylinder stroke (mm)	80
Power at 700 bar (T.)	19.8
Net weight (kg)	8.7 complete
Dimensions (cm)	18 x Ø 8

SCHRADER PACIFIC
Tire Hardware Solutions

These tools must be used with a 700 bar manual or hydropneumatic pump.
• Never stand behind a tool during use.

• Suffix 67 or Q7: tools equipped with quick-connector 67072-67.
• Suffix 99 or Q9: tools equipped with screw-on connector 67065-67.

BLOCKING WEDGES FOR 3-PIECE RIMS

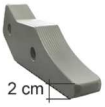

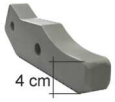

65195-67	65229-67	61312-67	61313-67
DYICI-type wedge (Order 4 wedges for a complete set)	CIF-type wedge set	Wedge set with minimum thickness of 20 mm	Wedge set min. thickness 40 mm

BLOCKING WEDGES FOR 5-PIECE RIMS

67029-67
Set of 2 blocking wedges for 5-piece rims (Use of nuts prohibited)

WEDGES FOR BARJUKY 2

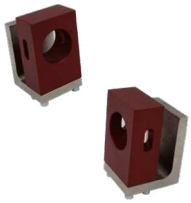

61542-67
Set Of 2 BARJUKY2 Wedges For 24" Rims

TOOLS FOR OTR TIRES

67078-67	67236-67	66085-67
Facom Hammer for OTR tires 2.8 kg The handle is not guaranteed	Locking jaw pliers	Straight stainless steel wire brush 0.35, 4 rows, L = 310 mm body made of beech

HQ INTENSIVE USE

BARJUKY 2®

A single tool from 25 " to 35 " and 51" with the extension

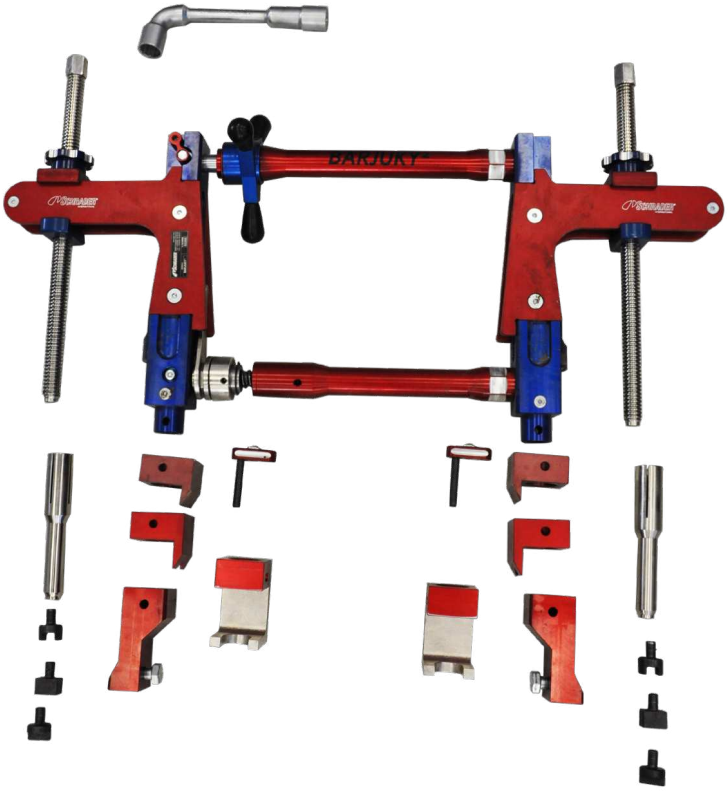

Do not use an impact wrench

	61362-67
Intended use	• The BARJUKY² tool is used to position the seal on open-centre or closed-centre wheels of 25" to 35". • On assembly, the operation to place the O-ring seal is easy and safe as the Barjuky² pushes the flange and the locking rim. It makes removal of protected flanges easier. • Rigid tool, easy to position and extremely light. • Multi-purpose device on several types of rim: - Open-centre wheels: it grips on the inside of the wheel. - Closed-centre wheels: grips on the wheel studs or threaded holes. Delivered complete
Weight when equipped, without extensions 51" (kg)	19
Weight when equipped, with extensions 51" (kg)	20
Storage case	Wooden box with rollers 103 x 23 x 67 cm

SCHRADER PACIFIC Tire Hardware Solutions

OPTIONS

61363-67	61264-67	61365-67	61443-67
Extension Barjuky² from 39" to 51"	Male European extensions	Male Komatsu extensions	Female extensions available on request

DUALUKY OPTION FOR DUAL WHEELS

Working in pairs

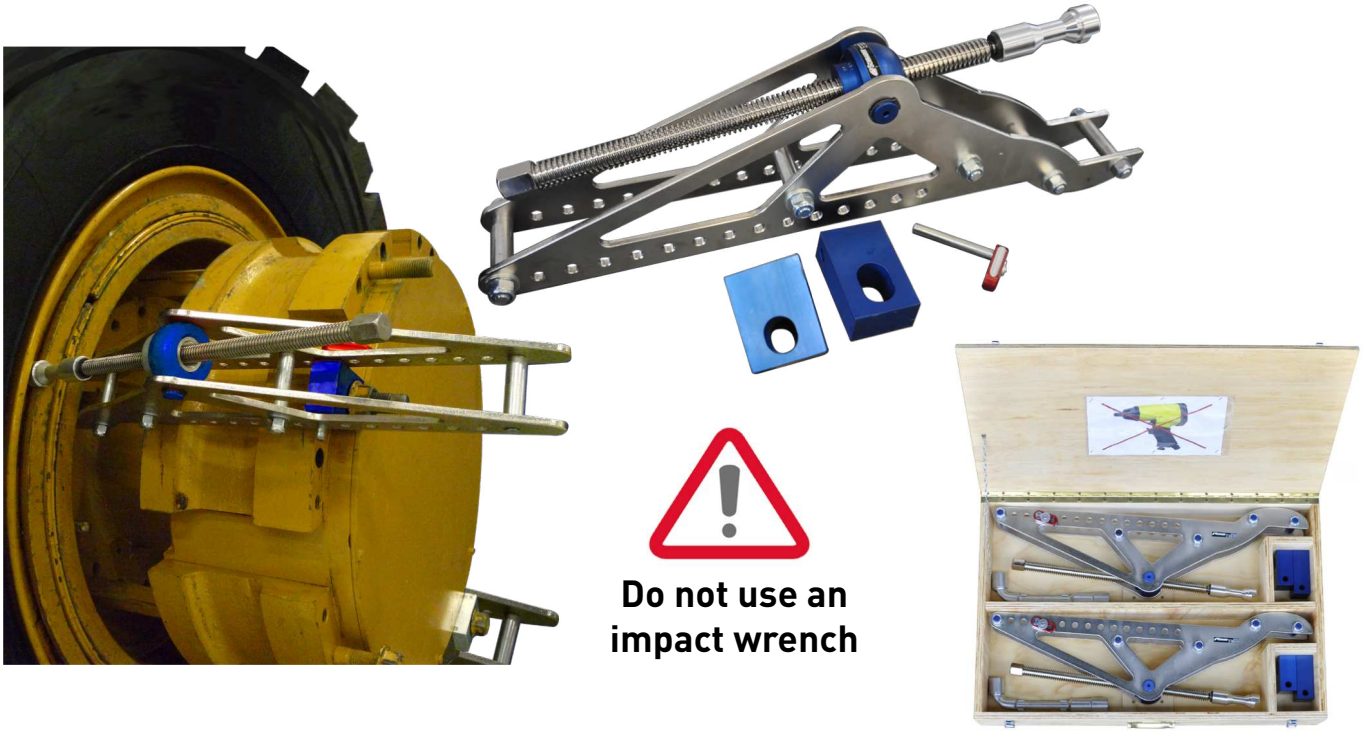

	61352-67	61352-72
Intended use	For dual tires from 35" to 49"	
Cylinder stroke (cm)	40	
Weight (kg)	8.5	
Dimensions (cm)	76 x 10 x 24	
Nbr of tool	1 tool	2 tools

67099-97

Wooden case, dimensions: L. 81.5 x W. 47 x H. 41.5 cm
Empty weight: 20.5 kg
The products are sold with a mounted screw-on connector.
A quick connector is provided for each tool.

66016-97

Details on page 220

MAXI-KOUSMA bead breaker for 3-piece rims with tall rings.
Max hooking height 3.5".
Adjustable claw.

61297-97

Details on page 224

TALLMA magnetic bead breaker for the interior of 3- to 5-piece rims mounted on earth-moving equipment.
Magnetic extensions made of light alloy with different lengths included.

66017-97

Details on page 223

SHUTTLE-T bead breaker recommended on internal and external side of 5-piece rim.
Connector with 360° swivel.

65431-99

Details on page 208

Pump with 2.5 m hose, coupling, cap and air connector.

65992-67

Details on page 215

Adaptor from screw-on connector to quick connector

"AE" MAINTENANCE BOX

67600-67

"AE" maintenance box.
The essential complement for hydraulic tools and tire maintenance.
Strong metal box.
Dimensions 110 x 42 x 21 cm.
Total weight: 75 kg

CONTENTS

1 Eurodainu truck inflating gauge bar/psi **R-1821-Z**
1 Eurodainu earthmover inflating gauge bar/psi **35864-58**
1 Eurodaira truck pressure gauge bar/psi **38049-99**
1 Eurodaira earthmover pressure gauge bar/psi **38099-99**
1 HYOCA lever **R-1194-1**
1 HYUDE lever **R-1194-1**
2 SAYAM levers **R-0858-1**
2 HALTE levers **R-1060-1**
1 FORCE lever **R-1289-1**
1 FIACRE lever **R-0427-1**
1 FIFRE lever **R-0428-1**
2 FACE levers **R-0426-1**
1 tire bead remover FAGUS **R-1230-1**
2 metal handbrushes, long handle 300 mm (*)
2 brushes for grease truck/earthmover **60805-67**
1 tire grease tin 4 kg TIGRE **R-5084-1**
1 flat key 17 x 19 (*)
1 flat key 24 x 26 (*)
1 lock-grip pliers **67236-67**
2 handling gloves (*)
1 core and cap screwing tool passenger car/truck **R-1255-1**
1 earthmover core and cap screwing tool **R-1469-1**
2 earthmover/truck adaptors **R-1296-1**
2 large bore snap-on couplers **R-0767-1**
10 inflation nipples **R-0985-2** valve side for hose 7 x 13
2 large bore nipples **R-0984-1** for hose int. Ø 7
100 cores passenger car and truck **43022-69**
50 short cores earthmover **R-0765-2**
100 caps passenger car and truck **R-1424-3**
50 caps earthmover **R-0766-2**
1 tube deflator **R-0634-1**
1 valve thread repair tool for passenger car/truck **S-4259-1**
1 valve thread repair tool for earthmover **R-0769-1**
1 section 3 m hose 7 x 13 **S-6572-1**
10 hose couplers outlet side **R-0986-2** for hose 7 x 13
10 rotating nipples inlet side **R-0987-2** for hose 7 x 13
30 ferrules **R-1430-2** for hose 7 x 13
100 sealing washers truck **R-0569-3**
1 hex. socket 23, square 1/2" **65047-67 (*)**
1 hex. socket 24, square 1/2" **65048-67 (*)**
1 hex. socket 27, square 1/2" **65049-67 (*)**
1 hex. socket 30, square 1/2" **65050-67 (*)**
1 square 1/2" **65046-67 (*)**
(*) Parts not available for retail purchase

SEALS

(2)

(1)

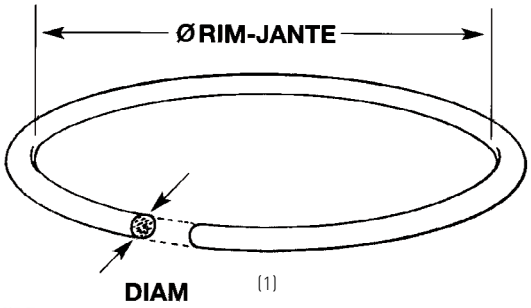

(1)

(2)

(1) SealS TYPE "0"						
	Ø on rim seat (")	Ø of seat (")	Type	Code with OR	Michelin range	Schrader S.A.S. range
	20	1/4	-	OR-220T-TG	-	65882-67
	24	1/4	-	OR-224-TG	-	66795-67
	25	1/4	HUEPO	OR-225-T	R-1438-1	65359-67
	25	3/8	SULLA	OR-325-T	R-1437-1	65360-67
	29	3/8	SULKY	OR-329-T	R-1439-1	65361-67
	33	3/8	STRIX	OR-333-T	R-1440-1	65362-67
	35	3/8	STRAS	OR-335-T	R-1441-1	65363-67
	39	3/8	FUODI	OR-339-T	R-1069-1	65364-67
	45	1/2	-	OR-445-T	-	65365-67
	45	3/8	-	OR-345-T	R-1580-1	65636-67
	49	1/2	-	OR-449-T	-	66796-67
	49	3/8	HEYCO	OR-349-T	R-1442-1	65366-67
	51	3/8	-	OR-351-T	-	65368-67
	51	1/2	-	OR-451-T	-	65319-67
	57	1/2	-	OR-457-T	-	65367-67

(2) SealS TYPE "L"						
	Ø on rim seat (")		Type		Michelin range	Schrader S.A.S. range
	20	-	TYRAN (LR20)		R-1443-1	65729-67
	25	-	LR 25		-	65464-67
	29	-	LR 29		-	65465-67
	33	-	LR 33		-	65577-67
	35	-	LR 35		-	66961-67

SCHRADER PACIFIC
Tire Hardware Solutions

HANDLING LIFTING

STRAPS AND LIFTING LOOPS

• Straps are used for handling without damaging the beads:
This is very important for the leaktightness of tubeless products.
• They are also used to lift a tire by the external diameter when it is taken off of the wheel
(in this case use an 8 m strap for tires with a diameter of 2 m, for example).

	67126-67	67127-67	67128-67	67131-67	67132-67	67135-67
L. (m)	3	6	8	10	12	Shackle
l. (cm)	5	5	5	5	5	
Force (T)	1	1 to 2	1 to 2	2 to 3	2 to 3	2
Colour	Purple	Purple	Purple	Green	Green	-

FLAT CLOSED STRAPS

	65437-67	65438-67
Useful length: (m)	3	2
Width (cm)	5	5
Force (T)	3	3
Colour	Yellow	Yellow

RATCHET STRAPS

	67446-67	67447-67	67448-67	67449-67
Width x length (cm)	Mini-strap 350 x 2.5	300 x 5	400 x 5	500 x 5
Colour	Yellow	Blue	Yellow	Green
Type of tensioner	Mini	Large	Large	Large
Marking (*)	-	SCHRD 3	SCHRD 4	SCHRD 5

(*) The No. corresponds to the length of the strap in m

TOOL GUIDE

1-piece	66014-97	MINI KOUSMA	Max ring height: 43 mm // Jack stroke: 100 mm
	65071-97	COMPACT	Max ring height: 35 mm // Jack stroke: 40 mm
	61193-97	SUPER-COMPACT	Max ring height: 35 mm // Jack stroke: 70 mm
	67030-67 / -99	US BEAD BREAKER	Max ring height: 35 mm // Bead breaker stroke: 95 mm
	66995-97	SKYMA	Max ring height: 43 mm // Bead breaker stroke: 70 mm

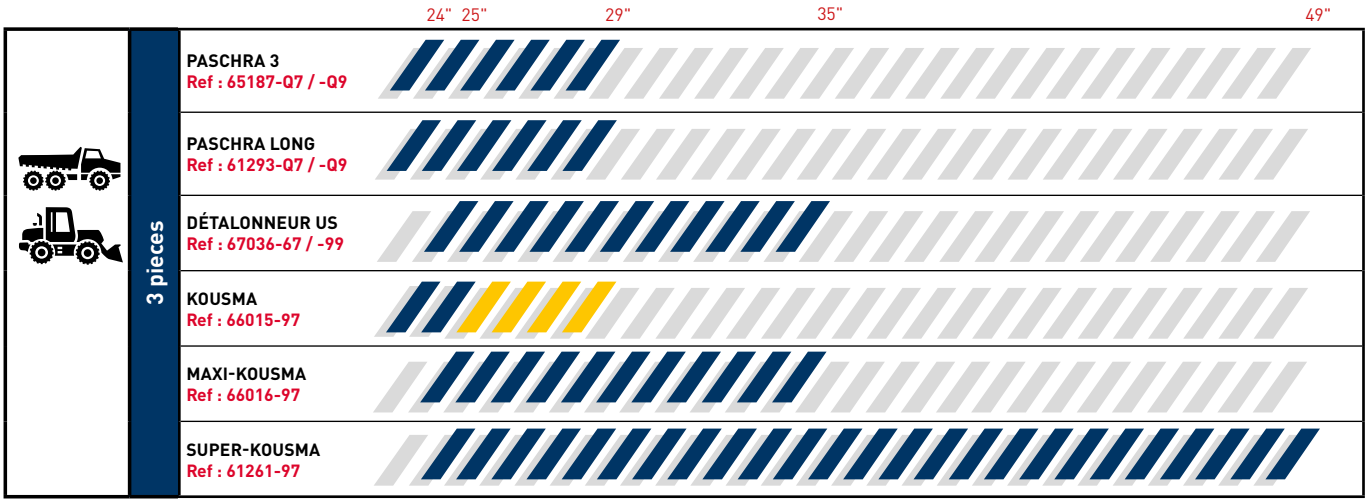

Spare connectors

	1-piece					
	US bead breaker		Mini Kousma	Compact	Super Compact	Skyma
	67030-67	67030-99	66014-97	65071-97	61193-97	66995-97
65296-67			x	x	x	x
66821-67			x	x	x	x
67065-67		x				
67072-67 + 67074-67	x					

	3-piece								
	Paschra				US bead breaker		Kousma	Maxi-Kousma	Super-Kousma
	Bead breaker + claw		Bead breaker alone						
	65187-Q7	65187-Q9	61293-Q7	61293-Q9	67036-67	67036-99	66015-97	66016-97	61261-97
65296-67							x	x	x
66821-67							x	x	x
67065-67		x		x		x			
67072-67 + 67074-67	x		x		x				

SCHRADER PACIFIC Tire Hardware Solutions

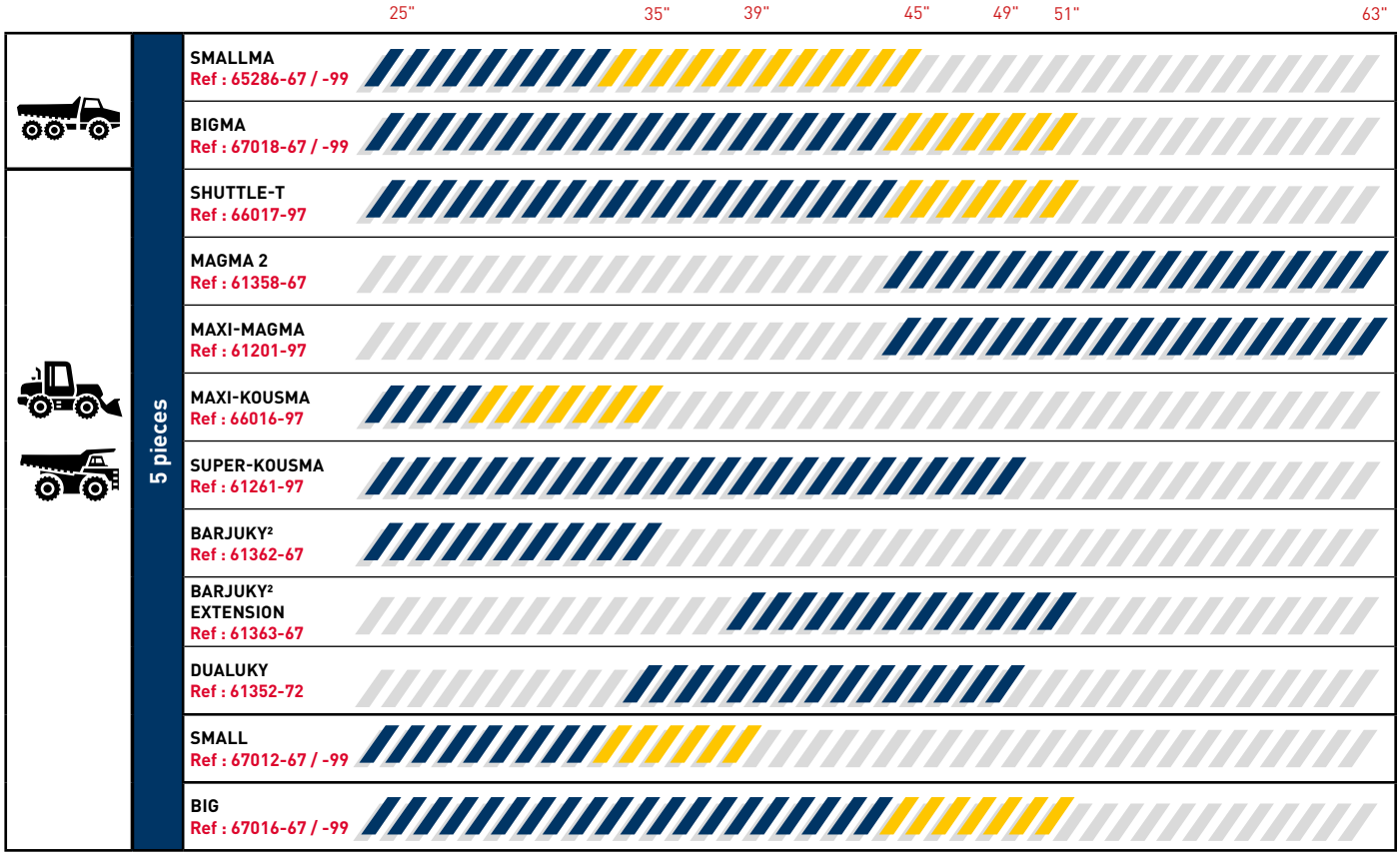

Spare connectors

	5-piece								
	Small		Big		Smallma		Bigma		Shuttle-T
	67012-67	67012-99	67016-67	67016-99	65286-67	65286-99	67018-67	67018-99	66017-97
65296-67									x
66821-67									x
67065-67		x		x		x		x	
67072-67 + 67074-67	x		x		x		x		

	5-piece							
	Maxi-Kousma	Super-Kousma	Magma 2	Maxi-Magma	Sayma-2		Tallma	Barjuky2
	66016-97	61261-97	61358-67	61201-97	66985-Q7	66985-Q9	61297-97	61362-67
65296-67	x	x	x	x			x	x
66821-67	x	x	x	x			x	x
67065-67						x		
67072-67 + 67074-67					x			

SCHRADER PACIFIC Tire Hardware Solutions

SCHRADER AFTER SALES SERVICE RETURN FORM

(The form can be downloaded from shop.schrader-pacific.fr website)

1 - Recipient / Contact	**Your SCHRADER contact person:**	**Shipment date:**
SCHRADER S.A.S.	sav@schrader-pacific.fr Fax: +333 81 38 56 41	
SAV RETOURS		Forwarder:
Rue Jean Mermoz		
Quai N° 3		Shipment note:
25300 PONTARLIER		

2 - Sender	(or) Sender's stamp
Customer Nr:	
Company Name:	
Adress:	
City / Country:	
Postcode:	
Contact person:	
Phone:	
Email:	

3 - Material
Type:
Part Number:
Serial Nr:
Date of Purchase (invoice copy to attach) :

4 – Detected Defect	**Description and Details:**
❒ Leak (air, oil)	
❒ Broken, distorted or damaged part	
❒ Remains blocked	
❒ Does not hold the charge	
❒ Other functioning defect	
❒ Calibration defect	
❒ Other:	

5 - Remarks

Reminder of the operating rules:

Shipment costs to the After Sales Service and returns are at the customer's charge. Return costs are at SCHRADER SAS's charge only if the material is still under warranty. The product must be returned as complete as possible to enable all parts to be tested. In case the material is not completed and found to be defective after tests, it will be replaced by another product with the same level of equipment.

A quote will be submitted on receipt of the defective product. If approved, a proforma invoice including the repair and the return freight costs will be sent, unless the product is still under warranty. If refused, diagnosis costs will be charged (these costs are detailed in the initial quote).

Important: you are responsable for whatever material returned by you. Check the quality of your packaging. In case of loss or damage, you will have to prove that the material has been received by Schrader After Sales Service.

Chapter 10

INDEX ETRTO
NUMERICAL INDEX
ALPHABETICAL INDEX

ETRTO

INDEX ETRTO

REFERENCE		PAGE
ETRTO	SCHRADER	
"(V1.10.1)"	S-4043-2	PAGE 10
"(V1.11.1)"	R-1674-2	PAGE 11
"(V2.03.1)"	R-1496-2 R-1496-3 S-4636-55 66504-80	PAGE 8
"(V2.03.2)"	R-0756-2 R-0756-3 S-4638-55 66507-80	PAGE 8
"(V2.03.3)"	S-4156-2 S-4156-3 S-4156-55	PAGE 10
"(V2.03.4)"	R-1799-2 R-1799-3 S-4642-55 66513-80	PAGE 8
"(V2.03.5)"	65265-69	PAGE 8
"(V2.03.6)"	S-4040-2 S-4040-3 S-4040-55 66501-80	PAGE 8
"(V2.03.8)"	R-1878-2 R-1878-3 S-4640-55 35167-69	PAGE 8
"(V2.04.1)"	R-1510-2 R-1446-2	PAGE 12
"(V2.05.1)"	S-4042-2 S-4042-G	PAGE 11
"(V3.02.12)"	R-1157-2	PAGE 26
"(V3.02.13)"	R-0751-2	PAGE 25
"(V3.02.14)"	R-1158-2	PAGE 26
"(V3.02.17)"	R-0752-2	PAGE 25
"(V3.02.2)"	R-0570-2	PAGE 25
"(V3.02.3)"	R-0576-2	PAGE 25
"(V3.02.5)"	R-1003-2	PAGE 25
"(V3.02.9)"	R-1156-2	PAGE 26
"(V3.04.2)"	R-1198-2	PAGE 28
"(V3.06.1)"	R-0922-2	PAGE 30
"(V3.06.2)"	R-0580-2	PAGE 30
"(V3.06.5)"	R-0582-2	PAGE 29
"(V3.06.6)"	R-0819-2	PAGE 29
"(V3.06.8)"	R-1123-2	PAGE 29
"(V3.07.1)"	R-1007-2	PAGE 28
"(V3.08.2)"	S-4014-2	PAGE 26
"(V3.12.1)"	R-1294-2 R-1294-7	PAGE 20
"(V3.14.1)"	R-0806-2	PAGE 20

REFERENCE		PAGE
ETRTO	SCHRADER	
"(V3.14.2)"	R-0808-2	PAGE 21
"(V3.15.1)"	R-1089-2	PAGE 21
"(V3.15.2)"	R-1051-2	PAGE 21
"(V3.16.1)"	R-1013-2	PAGE 22
"(V3.18.1)"	R-0907-2	PAGE 22
"(V3.18.2)"	R-0920-2	PAGE 23
"(V3.19.1)"	R-0911-2	PAGE 23
"(V3.20.1)"	R-0964-2 R-0964-3 R-0964-7 41534-68	PAGE 16-17
"(V3.20.2)"	R-1798-2	PAGE 16
"(V3.20.4)"	R-1485-2 R-1485-3 R-1485-7	PAGE 16
"(V3.20.5)"	R-1486-2 R-1486-3 R-1486-7	PAGE 16
"(V3.20.6)"	R-1487-2 R-1487-3 R-1487-7	PAGE 16
"(V3.20.7)"	R-1500-2	PAGE 16
"(V3.20.12)"	R-1680-2 R-1680-3 R-1680-7	PAGE 16
"(V3.21.1)"	41788-68 R-2027-2 R-2027-7	PAGE 19
"(V3.21.2)"	S-4591-2	PAGE 19
"(V3.21.9)"	41518-68	PAGE 19
"(V3.22.1)"	R-2123-2 R-2123-3 R-2123-7 42729-68	PAGE 16-17
"(V3.23.1)"	43025-68 43025-69 43025-72 43025-80	PAGE 9
"(V4.02.1)"	R-1139-2	PAGE 40
"(V4.03.1)"	S-4046-2 S-4046-R	PAGE 40
"(V5.03.1)"	R-1009-1	PAGE 43
	R-0979-1	PAGE 47
"(V5.04.1)"	R-1837-1 R-1837-2 R-1837-3	PAGE 45
"(V5.04.2)"	S-4039-1	PAGE 45
"(V5.09.1)"	S-4022-1	PAGE 46
"(V5.15.1)"	61531-68 61531-69	PAGE 41
"(V5.15.3)"	S-4021-1	PAGE 42
"(V9.14.1)"	R-1225-2 R-1225-3	PAGE 40

NUMERICAL INDEX

reference	page
15-224	131
15-225	131
15-227	131
15-230	131
15-231	131
15-232	131
15-280	130
15-281	130
15-986-3M	130
17-244	158
17-245	158
17-246	158
17-248	158
17-249	158
37-099	39
41-466	192
192-193	253
369-100	63
4711SPP	197
30307-53	56
30307-54	56
30307-57	56
30307-63	56
32264-67	82
32264-67	84
32266-67	82
32266-67	85
32361-68	58
32421-68	58
32422-68	58
33622-39	63
33640-67	191
33645-68	17
33705-67	156
33759-67	178
33760-67	178
33762-67	68
33763-67	68
33764-67	68
33765-67	68
33766-67	68
33767-67	68
33769-67	195
33792-69	57
35167-69	8
35934-99	86
37478-68	58
37900-58	57
37900-58	67
37900-63	57
37900-65	57
37900-65	67
37992-69	56
37992-80	56
38038-99	80
38039-99	80
38048-99	80
38049-99	80
38075-99	80
38076-99	80
38077-99	80
38078-99	80
38879-58	76
38879-58	82
38902-58	76
38902-58	82
39064-00	86
39065-00	86
39066-67	82
39066-67	83
39080-67	82
39080-67	83
39100-00	77
39100-00	82
39101-00	77
39101-00	82
39103-00	77
39103-00	82
39104-00	77
39104-00	82
39106-00	77
39106-00	82
39111-00	77
39111-00	82
39700-00	75
39700-00	82
39701-00	75
39701-00	82
39702-00	75
39702-00	82
39703-00	75
39703-00	82
39766-67	82
39766-67	83
39900-00	74
39900-00	82
39901-00	74
39901-00	82
39902-00	74
39902-00	82
39921-00	74
39921-00	82
39923-00	74
39923-00	82
39925-00	74
39925-00	82
39926-00	74
39926-00	82
39927-00	74
39927-00	82
39928-00	74
39928-00	82
39929-00	74
39929-00	82
39931-00	74
39931-00	82
39933-00	74
39933-00	82
40058-67	78
40059-67	78
40117-67	86
40122-67	86
41143-20	58
41199-20	58
41291-09	84
41291-68	84
41315-68	31
41315-71	31
41316-68	31
41316-71	31
41317-68	31
41317-71	31
41318-68	31
41318-71	31
41319-68	31
41319-71	31
41320-68	31
41320-71	31
41321-68	31
41321-71	31
41322-68	31
41322-71	31
41323-68	31

SCHRADER PACIFIC Tire Hardware Solutions

NUMERICAL INDEX

reference	page
41323-71	31
41324-68	31
41324-71	31
41325-68	31
41325-71	31
41326-68	31
41326-71	31
41327-68	31
41327-71	31
41518-68	19
41534-68	17
41558-68	10
41684-68	18
41703-68	24
41734-68	58
41776-68	31
41777-68	31
41788-68	19
41796-44	62
41797-44	62
41798-44	62
41799-44	62
41800-44	62
41801-44	62
41802-44	62
41803-44	62
41804-44	62
41805-44	62
42016-68	31
42039-68	11
42039-69	11
42132-68	17
42168-68	17
42176-68	41
42214-68	32
42214-69	32
42215-68	32
42215-69	32
42216-68	32
42216-69	32
42217-68	32
42217-69	32
42218-68	32
42218-69	32
42253-68	33
42253-69	33
42321-69	57
42393-68	58

reference	page
42563-68	32
42564-68	32
42729-68	17
42996-68	58
43000-68	58
43001-68	58
43025-68	9
43025-69	9
43025-72	9
43025-80	9
43078-69	56
43078-69	67
43249-68	32
43374-20	58
43380-20	58
43457-68	56
43770-68	31
43771-68	31
43772-68	31
44073-67	89
44096-67	78
60038-67	185
60166-71	57
60181-67	160
60219-39	68
60220-39	68
60221-39	68
60222-39	68
60223-39	68
60226-67	81
60235-67	160
60267-67	177
60268-67	174
60269-67	174
60270-67	174
60271-67	174
60272-67	174
60273-67	174
60274-67	174
60275-67	174
60276-67	174
60277-67	174
60278-67	174
60279-67	174
60280-67	177
60281-67	177
60282-67	177
60283-67	177

reference	page
60284-67	177
60285-67	177
60286-67	177
60287-67	177
60288-67	177
60289-67	176
60290-67	176
60291-67	176
60292-67	176
60293-67	176
60295-67	176
60296-67	176
60297-67	176
60298-67	176
60299-67	176
60300-67	176
60301-67	176
60302-67	176
60303-67	176
60304-67	176
60305-67	177
60308-67	184
60310-67	177
60324-67	176
60325-67	176
60327-67	176
60328-67	176
60329-67	176
60333-67	159
60338-67	158
60339-67	138
60339-67	138
60339-67	140
60339-67	149
60340-67	138
60340-67	138
60340-67	140
60340-67	149
60341-67	138
60341-67	138
60341-67	140
60341-67	149
60342-67	149
60342-67 (*)	138
60342-67 (*)	140
60343-67	149
60343-67 (*)	138
60343-67 (*)	140

NUMERICAL INDEX

reference	page
60344-67	149
60344-67 (*)	138
60344-67 (*)	140
60345-67	149
60345-67 (*)	138
60345-67 (*)	140
60346-67	149
60346-67 (*)	138
60346-67 (*)	140
60347-67	149
60347-67 (*)	138
60347-67 (*)	140
60349-67	138
60349-67	140
60349-67	150
60350-67	138
60350-67	140
60350-67	150
60355-67	138
60355-67	140
60355-67	150
60356-67	138
60356-67	140
60356-67	150
60358-67	138
60358-67	140
60358-67	150
60359-67	138
60359-67	140
60359-67	150
60360-67	150
60373-67	138
60373-67	140
60373-67	150
60374-67	138
60374-67	140
60374-67	150
60376-67	151
60377-67	151
60379-67	151
60380-67	151
60382-67	151
60383-67	151
60396-67	223
60398-67	223
60500-67	118
60501-67	118
60502-67	118

reference	page
60503-67	118
60504-67	118
60505-67	118
60506-67	118
60507-67	118
60509-67	118
60511-67	118
60515-67	124
60516-67	124
60518-67	125
60518-68	125
60519-67	125
60520-67	125
60600-67	121
60601-67	121
60602-67	121
60603-67	121
60604-67	121
60605-67	121
60606-67	121
60607-67	121
60611-67	121
60612-67	121
60613-67	121
60615-67	121
60616-67	121
60617-67	121
60618-67	121
60619-67	121
60620-67	121
60621-67	121
60622-67	121
60623-67	121
60624-67	121
60625-67	121
60626-67	121
60627-67	121
60628-67	121
60630-67	121
60631-67	121
60632-67	121
60633-67	121
60651-67	123
60652-67	123
60653-67	123
60655-67	123
60657-67	123
60659-67	123

reference	page
60665-67	123
60666-67	123
60667-67	123
60668-67	123
60669-67	123
60670-67	123
60680-67	123
60681-67	123
60682-67	123
60683-67	123
60684-67	123
60685-67	123
60686-67	123
60687-67	123
60700-67	120
60701-67	120
60702-67	120
60703-67	120
60704-67	120
60705-67	120
60706-67	120
60710-67	124
60712-67	124
60717-67	125
60718-67	125
60719-67	125
60730-67	124
60731-67	126
60732-67	126
60733-67	126
60734-67	126
60736-67	126
60740-67	126
60741-67	126
60804-67	185
60805-67	185
60809-67	90
60810-67	90
60811-67	90
60812-67	90
60813-67	186
60816-67	90
60817-67	90
60818-67	90
60880-67	127
60881-67	158
60882-67	138
60882-67	140

SCHRADER PACIFIC Tire Hardware Solutions

NUMERICAL INDEX

reference	page
60882-67	153
60883-67	153
60883-67 (*)	138
60883-67 (*)	140
60884-67	152
60885-67	152
60886-67	159
60887-67	153
60888-67	153
60889-67	153
60893-67	139
60893-67	147
60895-67	147
61137-67	144
61137-67	152
61138-67	144
61138-67	152
61139-67	144
61139-67	152
61140-67	144
61140-67	152
61143-67	154
61144-67	154
61145-67	154
61146-67	148
61148-67	126
61149-67	126
61181-67	87
61182-67	158
61193-97	217
61193-97	232
61201-97	222
61201-97	233
61203-67	222
61210-67	167
61211-67	167
61212-67	167
61213-67	167
61214-67	167
61215-67	167
61216-67	167
61217-67	167
61218-67	167
61219-67	167
61220-67	167
61222-71	34
61223-71	34
61224-69	34

reference	page
61225-69	34
61261-97	221
61261-97	232
61261-97	233
61264-67	227
61271-67	199
61273-67	199
61274-67	199
61279-71	34
61286-67	199
61288-67	96
61289-67	97
61290-67	99
61290-68	99
61292-67	209
61292-99	209
61293-Q7	218
61293-Q7	232
61293-Q9	218
61293-Q9	232
61297-97	224
61297-97	228
61297-97	233
61300-67	88
61301-67	49
61302-67	46
61303-67	46
61304-67	49
61305-67	49
61306-67	49
61307-67	49
61308-67	51
61309-67	50
61310-67	50
61311-67	49
61312-67	225
61313-67	225
61314-67	48
61316-67	46
61317-67	46
61318-67	46
61319-67	196
61320-67	157
61321-67	198
61323-67	57
61348-67	198
61349-67	198
61350-67	198

reference	page
61351-67	198
61352-67	227
61352-72	227
61358-67	233
61358-97	222
61359-67	148
61360-67	148
61362-67	226
61362-67	233
61363-67	227
61364-67	141
61364-67	148
61365-67	227
61367-71	34
61368-71	34
61369-69	34
61370-69	34
61372-67	183
61379-67	175
61390-67	34
61394-67	207
61413-67	172
61417-67	88
61418-67	88
61420-67	122
61421-67	122
61422-67	122
61423-67	122
61424-67	122
61425-67	116
61426-67	116
61427-67	116
61427-68	116
61428-67	186
61429-67	116
61430-67	117
61431-67	116
61432-67	116
61442-67	183
61444-67	216
61445-67	185
61447-67	197
61448-67	197
61449-67	93
61450-67	93
61451-67	93
61452-67	96
61453-67	97

NUMERICAL INDEX

reference	page
61454-67	97
61455-67	97
61459-67	95
61460-67	95
61461-67	95
61462-67	95
61463-67	95
61464-67	95
61465-67	95
61466-67	95
61467-67	95
61468-67	95
61469-67	95
61470-67	95
61471-67	96
61472-67	96
61473-67	96
61474-67	179
61475-67	125
61481-67	96
61482-67	195
61483-67	159
61486-67	65
61487-67	92
61490-67	35
61491-67	63
61491-67	68
61520-67	65
61521-67	68
61522-67	68
61523-67	198
61524-67	198
61530-67	178
61531-68	41
61531-69	41
61535-67	107
61536-67	107
61537-67	186
61538-67	107
61539-67	107
61540-67	107
61541-67	107
61542-67	225
61583-67	98
61598-67	169
61599-67	79
61600-71	35
61601-71	35

reference	page
61602-71	35
61603-68	35
61604-68	35
61605-68	35
61606-68	35
61607-68	35
61608-68	35
61621-67	79
63183-67	178
65003-67	184
65015-67	183
65016-67	183
65017-67	183
65021-67	39
65022-67	39
65023-12	185
65023-67	185
65027-67	193
65028-68	192
65037-67	183
65056-67	174
65057-67	174
65058-67	174
65059-67	174
65060-67	174
65061-67	174
65063-00	88
65071-97	217
65071-97	232
65076-67	185
65082-67	92
65082-67	96
65083-67	96
65084-67	96
65085-68	99
65086-68	98
65087-68	98
65088-67	82
65088-67	83
65088-67	99
65088-67	172
65088-68	99
65089-67	82
65089-67	82
65089-67	82
65089-67	83
65089-67	99
65089-68	99

reference	page
65090-67	96
65091-67	97
65092-67	99
65093-67	103
65093-67	172
65094-67	99
65094-68	99
65095-68	83
65096-68	83
65097-68	83
65098-67	93
65099-67	93
65100-67	93
65101-67	93
65115-48	66
65115-67	66
65116-40	66
65116-67	66
65117-67	66
65117-67	66
65118-32	66
65118-67	66
65119-28	66
65119-67	66
65120-24	66
65120-67	66
65121-20	66
65121-67	66
65122-18	66
65122-67	66
65123-67	183
65124-67	183
65125-67	183
65126-67	159
65131-67	147
65175-67	177
65176-67	177
65177-67	177
65178-67	177
65179-67	177
65180-67	177
65181-67	177
65187-Q7	218
65187-Q7	232
65187-Q9	218
65187-Q9	232
65189-67	177
65190-67	177

SCHRADER PACIFIC
Tire Hardware Solutions

NUMERICAL INDEX

reference	page
65192-67	155
65195-67	225
65214-67	90
65215-67	90
65219-67	159
65225-67	177
65229-67	225
65240-67	196
65241-67	196
65252-68	12
65255-67	93
65265-69	8
65267-Q7	218
65267-Q9	218
65268-67	181
65270-67	98
65277-67	179
65279-67	159
65286-67	233
65286-99	233
65289-67	177
65290-67	192
65296-67	213
65296-67	214
65307-67	141
65307-67	147
65307-67	148
65308-67	147
65309-67	141
65309-67	147
65310-67	141
65310-67	147
65311-67	141
65311-67	147
65312-67	141
65312-67	147
65319-67	230
65328-67	165
65332-67	88
65354-67	181
65359-67	230
65360-67	230
65361-67	230
65362-67	230
65363-67	230
65364-67	230
65365-67	230
65366-67	230

reference	page
65367-67	230
65368-67	230
65410-67	130
65431-99	228
65431-EU	209
65432-67	168
65434-67	168
65437-67	231
65438-67	231
65441-EU	209
65444-67	167
65445-67	167
65446-67	147
65447-67	147
65448-67	147
65454-67	185
65455-67	185
65463-67	69
65464-67	230
65465-67	230
65468-67	135
65470-67	135
65472-67	135
65485-67	195
65488-67	218
65491-67	98
65496-67	211
65528-67	184
65528-99	184
65529-67	184
65529-99	184
65577-67	230
65578-67	98
65578-67	139
65578-67	141
65578-67	145
65578-67	146
65579-67	98
65580-67	152
65581-67	152
65591-67	214
65601-67	168
65602-67	168
65603-67	168
65605-67	223
65607-67	148
65613-67	124
65616-67	178

reference	page
65636-67	230
65663-67	177
65664-68	9
65667-67	163
65684-67	63
65686-67	186
65687-67	186
65726-67	211
65726-99	211
65729-67	230
65744-67	65
65745-67	65
65752-68	9
65752-69	9
65753-68	9
65753-69	9
65754-68	9
65754-69	9
65756-67	177
65757-68	18
65758-68	18
65760-68	18
65761-67	127
65763-67	186
65764-67	186
65765-68	12
65769-68	18
65775-67	173
65778-67	196
65779-67	195
65780-67	98
65781-67	174
65782-67	174
65786-67	78
65789-67	91
65790-67	91
65791-67	91
65794-67	139
65794-67	147
65794-67	148
65795-67	139
65795-67	147
65795-67	148
65796-67	139
65796-67	141
65796-67	145
65796-67	146
65797-67	69

NUMERICAL INDEX

reference	page
65798-67	206
65802-67	216
65803-67	195
65804-67	195
65805-67	172
65807-67	172
65808-67	172
65810-67	103
65810-67	172
65812-67	159
65818-67	147
65822-67	161
65842-67	88
65843-67	88
65844-67	88
65845-67	172
65851-67	153
65852-67	214
65853-67	214
65855-67	174
65856-67	181
65857-67	181
65864-67	185
65865-67	166
65866-67	166
65867-67	206
65867-99	206
65870-67	166
65871-67	166
65872-67	167
65873-67	167
65874-67	167
65875-67	168
65876-67	168
65882-67	230
65897-67	169
65900-67	62
65901-67	62
65902-67	62
65903-67	62
65904-67	62
65905-67	62
65906-67	62
65907-67	62
65908-67	62
65909-67	62
65910-69	34
65911-69	34

reference	page
65912-69	34
65913-69	34
65914-71	34
65915-71	34
65917-67	205
65918-67	205
65919-67	205
65922-67	39
65932-67	211
65941-67	124
65947-67	185
65947-71	185
65948-67	185
65949-67	185
65957-67	211
65967-67	205
65968-67	205
65969-67	205
65978-67	205
65979-67	205
65982-67	169
65984-67	157
65992-67	215
65992-67	228
65993-67	215
66014-97	217
66014-97	232
66015-97	219
66015-97	232
66016-97	220
66016-97	228
66016-97	232
66016-97	233
66017-97	223
66017-97	228
66017-97	233
66021-71	35
66022-71	35
66023-71	35
66024-67	211
66024-99	211
66045-67	187
66046-67	187
66049-67	219
66049-67	220
66049-67	221
66068-67	183
66069-67	183

reference	page
66085-67	159
66085-67	225
66089-67	65
66091-67	172
66097-67	50
66098-67	52
66099-67	52
66105-67	210
66119-67	69
66121-50	63
66122-50	63
66124-67	152
66125-67	152
66158-67	59
66179-67	185
66179-71	185
66180-67	185
66181-67	185
66185-67	81
66185-67	191
66200-67	112
66201-67	112
66202-67	112
66203-67	112
66204-67	112
66205-67	112
66206-67	112
66207-67	112
66220-67	113
66221-67	113
66222-67	113
66223-67	113
66224-67	113
66225-67	113
66226-67	113
66227-67	113
66230-67	113
66231-67	113
66232-67	113
66233-67	113
66234-67	113
66235-67	113
66236-67	113
66237-67	113
66238-67	113
66239-67	113
66240-67	113
66241-67	113

SCHRADER PACIFIC Tire Hardware Solutions

NUMERICAL INDEX

reference	page
66242-67	113
66243-67	113
66245-67	113
66246-67	113
66247-67	113
66248-67	113
66249-67	113
66260-67	110
66261-67	110
66262-67	110
66263-67	110
66264-67	110
66265-67	110
66266-67	110
66267-67	110
66269-67	110
66270-67	110
66271-67	110
66272-67	110
66282-67	115
66283-67	115
66284-67	115
66286-67	115
66288-67	115
66330-67	114
66331-67	114
66332-67	114
66334-67	114
66335-67	114
66336-67	114
66338-67	114
66339-67	114
66340-67	114
66341-67	114
66342-67	114
66343-67	114
66344-67	114
66345-67	114
66346-67	114
66350-67	108
66351-67	108
66352-67	108
66353-67	108
66360-67	152
66362-67	114
66365-67	114
66383-67	158
66501-80	8

reference	page
66504-80	8
66505-68	8
66505-69	8
66505-80	8
66507-80	8
66508-69	8
66508-80	8
66513-80	8
66531-67	204
66532-67	204
66533-67	204
66534-67	204
66535-67	204
66536-67	204
66537-67	204
66538-67	204
66539-67	204
66541-67	78
66542-69	34
66576-67	174
66577-67	175
66578-67	175
66579-67	175
66580-67	175
66581-67	175
66582-67	175
66583-67	175
66584-67	175
66585-67	175
66586-67	175
66587-67	175
66588-67	175
66589-67	175
66590-67	175
66591-67	175
66592-67	175
66593-67	175
66594-67	175
66595-67	175
66596-67	175
66597-67	176
66598-67	176
66599-67	176
66600-67	176
66601-67	176
66602-67	176
66603-67	176
66604-67	176

reference	page
66605-67	176
66606-67	176
66607-67	176
66608-67	176
66609-67	176
66611-67	177
66612-67	177
66613-67	177
66614-67	177
66615-67	177
66617-67	96
66618-67	97
66620-67	99
66662-67	164
66662-67	164
66663-67	164
66663-67	164
66664-67	157
66665-67	172
66665-67	172
66665-67	172
66667-67	92
66668-67	92
66669-67	172
66670-67	103
66670-67	172
66687-67	150
66687-67 (*)	138
66687-67 (*)	140
66688-67	151
66689-67	151
66701-67	175
66702-67	175
66703-67	175
66704-67	174
66725-67	210
66732-69	34
66733-69	34
66734-68	35
66735-68	35
66738-67	96
66739-67	96
66747-67	48
66748-67	48
66749-67	48
66750-67	48
66751-67	48
66752-67	48

NUMERICAL INDEX

reference	page
66753-67	48
66754-67	48
66755-67	48
66756-67	48
66757-67	48
66758-67	48
66759-67	48
66760-67	48
66761-67	48
66762-67	48
66763-67	48
66764-67	48
66765-67	48
66766-67	48
66767-67	48
66768-67	48
66769-67	48
66770-67	48
66771-67	48
66772-67	48
66773-67	48
66774-67	48
66775-67	48
66776-67	48
66777-67	48
66778-67	48
66779-67	39
66780-67	47
66781-67	50
66782-67	50
66783-67	50
66786-67	50
66787-67	51
66788-67	51
66791-67	51
66793-67	50
66794-67	50
66795-67	230
66796-67	230
66797-67	166
66799-67	146
66800-67	139
66800-67	141
66800-67	146
66801-67	145
66801-67	146
66802-67	157
66803-67	157

reference	page
66810-67	156
66811-67	156
66813-67	97
66814-67	99
66815-67	195
66816-67	172
66816-67	172
66817-67	172
66817-67	172
66818-67	59
66821-67	215
66837-67	168
66838-67	168
66840-67	168
66841-67	168
66843-67	168
66844-67	168
66845-67	168
66850-67	163
66851-67	222
66852-68	41
66858-67	183
66865-67	103
66865-67	172
66881-67	212
66882-67	212
66883-67	212
66886-67	63
66887-67	67
66892-00	75
66892-00	82
66938-67	35
66961-67	230
66962-67	144
66962-67	153
66964-67	92
66965-67	92
66969-67	160
66970-67	65
66981-67	176
66982-67	176
66983-67	176
66984-67	176
66985-Q7	224
66985-Q7	233
66985-Q9	224
66985-Q9	233
66986-67	224

reference	page
66995-97	219
66995-97	232
66999-67	186
67012-67	223
67012-67	233
67012-99	223
67012-99	233
67016-67	223
67016-67	233
67016-99	223
67016-99	233
67017-67	223
67018-67	221
67018-67	233
67018-99	221
67018-99	233
67023-67	221
67024-67	221
67025-67	221
67025-99	221
67029-67	225
67030-67	216
67030-67	232
67030-99	216
67030-99	232
67036-67	220
67036-67	232
67036-99	220
67036-99	232
67037-67	216
67037-67	220
67048-67	214
67065-67	213
67065-67	214
67066-67	213
67066-67	215
67067-67	213
67067-67	214
67068-67	213
67068-67	215
67069-67	213
67069-67	214
67071-67	213
67071-67	215
67072-67	213
67072-67	215
67073-67	213
67073-67	215

SCHRADER PACIFIC Tire Hardware Solutions

NUMERICAL INDEX

reference	page
67074-67	213
67074-67	214
67075-67	214
67076-67	214
67077-67	191
67078-67	225
67080-67	206
67080-99	206
67082-67	206
67082-99	206
67085-67	206
67085-99	206
67087-67	206
67087-99	206
67089-67	206
67099-97	228
67115-67	38
67120-67	39
67126-67	231
67127-67	231
67128-67	231
67131-67	231
67132-67	231
67135-67	231
67145-67	215
67147-67	215
67148-67	215
67149-67	214
67152-67	39
67163-68	83
67214-67	156
67215-67	155
67218-67	159
67220-67	159
67222-67	159
67223-67	125
67225-67	158
67226-67	158
67227-67	158
67228-67	158
67229-67	158
67231-67	157
67233-67	159
67234-67	159
67236-67	225
67240-67	213
67240-67	214
67241-67	213

reference	page
67241-67	214
67244-67	82
67244-68	83
67251-67	145
67251-67	148
67295-67	162
67296-67	162
67297-67	163
67301-67	163
67303-67	163
67308-67	163
67319-67	163
67370-67	165
67382-67	163
67382-67	166
67383-67	166
67384-67	166
67385-67	166
67386-67	166
67388-67	166
67389-67	166
67404-67	167
67405-67	167
67407-67	167
67411-67	167
67419-67	166
67433-67	167
67435-67	167
67445-67	167
67446-67	231
67447-67	168
67447-67	231
67448-67	168
67448-67	231
67449-67	168
67449-67	231
67469-67	161
67471-1E	161
67471-1P	161
67471-1R	161
67472-2E	161
67472-2P	161
67472-2R	161
67478-67	127
67479-67	127
67503-67	127
67504-67	127
67505-67	127

reference	page
67506-67	127
67600-67	229
67620-67	138
67620-67	138
67620-67	140
67620-67	149
67621-67	138
67621-67	138
67621-67	140
67621-67	149
67622-67	149
67622-67 (*)	138
67622-67 (*)	140
67623-67	149
67623-67 (*)	138
67623-67 (*)	140
67624-67	149
67624-67 (*)	138
67624-67 (*)	140
67625-67	149
67625-67 (*)	138
67625-67 (*)	140
67639-67	150
67639-67 (*)	138
67639-67 (*)	140
67640-67	150
67640-67 (*)	138
67640-67 (*)	140
67649-67	151
69668-67	88
69669-67	88
69881-67	195
95011-FF	108
95038-FF	108
410200	179
410600	179
411200	179
411500	179
412000	179
413000	179
420250	180
420330	180
420500	180
421000	180
450301	179
451205	179
451600	179
471105	197

NUMERICAL INDEX

reference	page
471123	197
471147HD	197
5995753	199
A02299-12	131
A02299-67	131
A06332-12	188
A06332-67	188
A07193-12	131
A07193-67	131
A16286-12	189
A16286-67	189
A25357-12	188
A25357-67	188
A25394-12	188
A25394-67	188
CRK0305IN	133
R-0038-1	87
R-0059-2	192
R-0153-1	82
R-0153-1	83
R-0415-1	86
R-0416-1	87
R-0425-1	194
R-0426-1	194
R-0427-1	194
R-0428-1	194
R-0517-2	84
R-0570-2	25
R-0572-2	25
R-0576-2	25
R-0578-2	27
R-0579-2	28
R-0580-2	30
R-0582-2	29
R-0634-1	39
R-0638-3	57
R-0697-1	85
R-0736-2	85
R-0750-2	25
R-0751-2	25
R-0752-2	25
R-0756-2	8
R-0756-3	8
R-0765-2	56
R-0766-2	57
R-0767-1	85
R-0769-1	192
R-0806-2	20

reference	page
R-0808-2	21
R-0819-2	29
R-0821-2	56
R-0822-1	43
R-0823-1	43
R-0824-1	43
R-0825-1	43
R-0826-1	43
R-0827-1	43
R-0829-1	44
R-0858-1	194
R-0904-1	87
R-0907-2	22
R-0911-2	23
R-0915-2	22
R-0920-2	23
R-0922-2	30
R-0933-1	86
R-0964-2	16
R-0964-3	16
R-0964-7	16
R-0965-1	44
R-0966-1	44
R-0979-1	47
R-0984-1	85
R-0985-1	84
R-0985-2	84
R-0986-2	84
R-0987-2	84
R-0990-2	9
R-0990-3	9
R-1003-2	25
R-1005-2	25
R-1007-2	28
R-1009-1	43
R-1013-2	22
R-1025-1	43
R-1051-2	21
R-1060-1	194
R-1069-1	230
R-1081-2	27
R-1089-2	21
R-1123-2	29
R-1124-1	43
R-1125-1	44
R-1139-2	40
R-1144-2	31
R-1156-2	26

reference	page
R-1157-2	26
R-1158-2	26
R-1194-1	194
R-1195-1	194
R-1197-2	33
R-1197-3	33
R-1198-2	28
R-1221-2	27
R-1225-2	40
R-1225-3	40
R-1230-1	194
R-1255-1	192
R-1289-1	194
R-1294-2	20
R-1294-7	20
R-1296-1	84
R-1424-3	57
R-1430-2	84
R-1431-2	31
R-1437-1	230
R-1438-1	230
R-1439-1	230
R-1440-1	230
R-1441-1	230
R-1442-1	230
R-1443-1	230
R-1446-2	12
R-1465-2	27
R-1469-1	192
R-1485-2	16
R-1485-3	16
R-1485-7	16
R-1486-2	16
R-1486-3	16
R-1486-7	16
R-1487-2	16
R-1487-3	16
R-1487-7	16
R-1496-2	8
R-1496-3	8
R-1500-2	16
R-1510-2	12
R-1533-2	10
R-1547-1	194
R-1549-2	23
R-1578-2	12
R-1580-1	230
R-1581-1	20

SCHRADER PACIFIC
Tire Hardware Solutions

NUMERICAL INDEX

reference	page
R-1581-2	20
R-1614-1	211
R-1632-2	21
R-1680-2	16
R-1680-3	16
R-1680-7	16
R-1781-1	80
R-1782-1	80
R-1798-2	16
R-1799-2	8
R-1799-3	8
R-1821-Z	76
R-1821-Z	82
R-1822-Z	76
R-1822-Z	82
R-1837-1	45
R-1837-2	45
R-1837-3	45
R-1842-1	47
R-1842-2	47
R-1878-2	8
R-1878-3	8
R-1898-2	16
R-1898-3	16
R-1898-7	16
R-1914-2	12
R-2021-2	16
R-2027-2	19
R-2027-7	19
R-2101-2	24
R-2102-2	24
R-2103-2	10
R-2112-2	19
R-2123-2	16
R-2123-3	16
R-2123-7	16
R-3500-2	84
R-3552-2	33
R-5027-1	159
R-5028-1	158
R-5084-0	187
R-5084-1	187
S-0346-1	93
S-0347-1	93
S-0348-1	93
S-0349-1	93
S-4000-3	56
S-4000-5	56

reference	page
S-4011-2	41
S-4014-2	26
S-4021-1	42
S-4022-1	46
S-4026-1	191
S-4030-1	47
S-4032-1	193
S-4037-1	45
S-4038-1	45
S-4039-1	45
S-4040-2	8
S-4040-3	8
S-4040-55	8
S-4042-2	11
S-4042-G	11
S-4043-2	10
S-4046-2	40
S-4046-R	40
S-4047-2	40
S-4049-2	192
S-4134-2	33
S-4145-M1	178
S-4145-V5	178
S-4156-2	10
S-4156-3	10
S-4156-55	10
S-4252-8	107
S-4259-1	192
S-4282-1	192
S-4295-2	17
S-4297-2	17
S-4306-1	154
S-4306-1 (*)	140
S 4310-1	147
S-4310-1	139
S-4312-1	149
S-4312-1 (*)	138
S-4312-1 (*)	140
S-4340-1	154
S-4340-1 (*)	140
S-4368-1	139
S-4368-1	145
S-4368-1	148
S-4369-1	154
S-4369-1 (*)	140
S-4370-1	138
S-4370-1	140
S-4370-1	154

reference	page
S-4374-1	138
S-4374-1	138
S-4374-1	140
S-4374-1	149
S-4385-1	40
S-4391-1	178
S-4392-2	192
S-4394-1	151
S-4451-1	87
S-4464-1	191
S-4504-2	33
S-4517-2	33
S-4529-2	33
S-4531-2	33
S-4551-2	33
S-4577-2	33
S-4584-2	33
S-4587-2	56
S-4591-2	19
S-4636-55	8
S-4638-55	8
S-4640-55	8
S-4642-55	8
S-4653-2	57
S-4700-1	178
S-4701-1	178
S-4702-1	178
S-4703-1	178
S-4704-1	178
S-4705-1	178
S-4706-1	178
S-4707-1	178
S-4708-1	178
S-4709-1	178
S-4723-2	193
S-4724-2	193
S-4730-1	178
S-4736-1	178
S 4788-1	146
S-4789-1	153
S-4792-1	154
S-4798-1	195
S-4946-1	152
S-4947-1	152
S-4948-0	107
S-4954-1	152
S-4958-8	107
S-4979-1	138

NUMERICAL INDEX

reference	page
S-4979-1	140
S-4979-1	154
S-4998-2	31
S-6483-44	62
S-6511-44	62
S-6512-44	62
S-6513-44	62
S-6514-44	62
S-6515-44	62
S-6516-44	62
S-6517-44	62
S-6518-44	62
S-6519-44	62
S-6570-1	93
S-6571-1	93
S-6572-1	93
S10015	132
S10016	132
S10031	132
SBAP	134
SDS5006IN	132
SDSB5GIN	134
T8029-20	57
T8029-100	57
T8030-100	57
T66690	56
T66690	192
T66690-10	56
V1584	191
V2234	189
V2820	190
V5540	197
V6742	190

reference	page

reference	page

SCHRADER PACIFIC
Tire Hardware Solutions

ALPHABETICAL INDEX

Produit	Page catalogue
1/2 spherical rasps	149
3M Versaflo	198
3-way valve for pump	39
A	
Abrasive discs	153
Adjustable props	179
Agricultural drainage tool	39
AIRBAGS	163, 167
Air Canons	88
Air grinders	146
Air inlet connectors	172
Air treatment unit "GLOBAL FRL SYSTEM"	94
ALCOA alloy rims	17, 18
Aluminium jack	206
Aluminium paste lubricant	188
Aracut sleeve II	198
ARIVAIR	80
Assembly kit for on-site repair	51
Automatic winders and hoses	92-93
B	
Balance weights	62
Balancing products	62-69
Ballasting pump	38
ball rasps	151
BARJUKY	226
battery	198
Bead bazooka	88
bead block	195
Bead breaker	216-221
Bead holder	195
Bead remover tool	192
Bent flexible extensions	29
BIG	221
BIGMA	219
blades	176
Blocking	205
Blocking wedges	225
BOOST'AIR	88
BOOSTER	89
Boxes and tubes	204
Brake cleaner	188
Brass extensions	33
brass tubeless valves	10
Brush caps	125
Brushes	125, 185
C	
Cap for farm valve hole	40
Caps	56-58
Carts	197
Caterpillar	52
Ceramic emulsion cylindrical rasp	151
Chalks	186
Checklink	35
Checklock sq	35
Checkpoint	34
Chucks and tool holders	147
circlip pliers	159
Clamping lugs for the flexible extensions	33, 50
claw	222
coated brass	18
Coiled hoses	93
Cold repair for radial and bias tires	112, 120
Collars	181-182

Produit	Page catalogue
C	
COMPACT	217
Compensation bags	168
compensator	127
Complete ballasting connector 1/2"	39
Complete hydraulic hoses	211
Components for VSM vulcanizers	166
Compressed air connectors	99
Compressed air equipment	94-95
Conical rasps	150
Conical reamer tools	152
Conical threaded quick connector	98
connection 360°	146
Connector for 80% water ballasting	39
connectors	96-99
Connectors for universal stems	26
Cores	56
Core screwdriver	56
Couplers for hoses internal ø 7 mm	84
Crimping kit	51
Curved knife	158
Cutters for metal	152
Cutting wheel	153
D	
defacing tool	159
degreaser	188
Detagel	186
DIGITAIR	74
Dismantling box	226
Distributors	210
Double-bend universal screw-on valves	28
Double junction connector	98
drop-centre rims	20
DUALUKY	227
Dustite lr	34
E	
Ear collars	83
Earthmover equipment	200
Electrical brush and accessories	148
electronic inflating gauges with handle	74
electronic wall Tire inflators	78
Emergency repair from the outside	130
EM lubricating gel	186
Empty can	186
EURODAINU	76
EURODAIRA	80
EURODIGIT	74
exhaust kit	146
Extensions	31, 33
Extensions (LB)	49
Extra thin impact sockets	174
Extruder guns	127
F	
FACE	194
FAGUS	194
Farm vehicles and earthmover valves	37
FEIMA	193
FEINE	193
Female tool holder	147

ALPHABETICAL INDEX

Produit	Page catalogue
F	
FIACRE	194
FIFRE	194
filling tubes	167
filter	95
Finishing products	117, 124
Finishing tools	153
flat Airbags	167
Flat brush	185
Flat closed straps	231
flat rims	23
flexible airbags	167
Flexible extensions	31
flexible heating pads	166
Flexible pump rings	91
Foldable extensions	48
FORCE	194
FRL	94
G	
glasses	198
gloves	198
Gouges	153
Grease for brush	148
guiding flange valves	24
Gums	126
Gum working tools	127
H	
HALTE	194
Hammer	225
Handling lifting	180
Hand pump for jug	135
Hand tools	159
High-flow valve	89
hook	216
Hose	84, 87
Hose coil	93
Hot plate	127
hydraulic bottle jacks	179
Hydraulic connections	212
Hydraulic distributors	210
hydraulic jacks	180
Hydraulic Oil	210
hydraulic pumps	208-209
Hydro-flotation	41
Hydropneumatic lifts	182-183
HYOCA	194
HYUDE	194
I	
Impact sockets	174-177
Impact sockets kit	175, 177
Impact socket with torque control	176
Impact wrenches	172-173
Inflating chucks	86
inflating gel	186
Inflation accessories	84
Inflation and compressed air equipments	71
inflation/ballasting connector	50
Inflation nipples and couplers	83
Inflation terminal	78-79
Inner tube repair patches (IRP)	110, 118
Inserts for radial tires	130
Insert tools	131

Produit	Page catalogue
J	
jacks	179-183
Junction connector	83
K	
Knife	158
KOUSMA	219
L	
Large bore connectors	85
Letter	161
levers	194
Lifter spreader support 300 kg	156
Lifting airbags	204
Long skirt	32
Lose wheel nut indicator	34
Lubricant	173, 185, 188
LUKAS	206
M	
MAGMA 2	222
Magnetic wedges	224
Male tool holder	147
mallet	159
MAMMUT	207
Manual bead breaker	216
manual hydraulic pumps	209
mask	198
MASTAIR	77
Material for rubbers	127
MAXIGEL	186
MAXI-KOUSMA	220
Mechanical inflating gauges	77
Mechanical tire spreader	156
metal caps	57
Metal spud for swivel valve	44
MINI-KOUSMA	217
Mini-rasp kit	151
Miscellaneous connectors	98
Miscellaneous levers	195
Monoblock	46
Mounted brushes with shaft	152
Mounting grease	187
Mounting paste	187
Multi-bend rigid extensions	49
O	
Oak wedges	205
Oil	188
Onyx	124
Opale	124
OTR knife	157
P	
particle filter	95
PASCHRA	218
PASCHRA LONG	218
Patches for radial tires	113-114, 121-123
Pencil rasps	151
Personal protections	198
Plastic wedges	205
Pliers	159
Pliers for weights	69
Pneumatic hammer	157
Pneumatic lifting airbags	204
Pneumatic tool lubricant	173
Portable lamp	197

SCHRADER PACIFIC Tire Hardware Solutions

ALPHABETICAL INDEX

Produit	Page catalogue
P	
Pressure gauges	81, 191
PRF	108
Progressive air gun	93
Protective screens	166
PRP	106
PS15 Truck STAR	178
Pump for jug	134
pump rings	90-91
Protection	195
PUMPS	208-209
Q	
Quartz	116
Quick junction connector	99
Quick tapped connector	98
R	
Rasp	149-151
Regulator	95
Repair kits	133
REPAIR PATCHES	110,118
Resistor	127
Rigid bent extensions	33
Rigid brass extensions	33, 48
Rigid pump rings	90
rim breakers	184
Ringbreakers	223
Rollers and emery rings	153
Round brush	185
Round rasps	150
Rubber hammer	189
Rubberized brushes	154
rule	159
Ring	10
S	
Safety glasses	198
Safety gloves	198
Safe wheel	35
Saphir	107
SAYAM	194
SAYMA	224
Schrad+	121-122
scissors	159
SDO+	123
Sealer	185
Sealing product	186
Self-vulcanizing bonding gum	126
Set of 5 hard brushes	154
Set of 5 soft brushes	154
Short skirt	32
SHUTTLE-T	223
Sidewall repair	169
SKYMA	219
slime	134
SMALL	223
Small hand tools	158
Soap	186
Spreaders, repair table	156
Spuds for universal screw-on valves	27
S.R.R	114
Steel convex brush	159
Steel-reinforced gum	126
steel risers for lifting jacks	206
Steel roller	158
stitcher	158
Stone for rubber tools	159
Straight and single-bend universal screw-on valves	26

Produit	Page catalogue
S	
Straight flexible extensions	31
Straight rigid nickel-coated brass extensions	33
straps	231
Stylmark	186
SUPER COMPACT	217
Swivel valves	44
T	
TALLMA	224
T-GREASE +	187
Threaded quick coupler	96
TIGRE 80	187
Tire markers	160-161
tire regroover	178
Tools for 1-piece rim	216-217
Tools for shaft machines	154
Tools for valves	
Toothed stitcher	158
Topaze	124
Torque wrenches	196
transfer bags	168
tread depth gauges	191
Triple-bend universal screw-on valves	28
TRP	108
Truck balancing beads	67
Truck star	178
T tools	131
tube deflator	39
Tubeless or euro inner tube valves (LB)	43
tubeless valves in nickel	17
U	
UNIVAIR	75
V	
Vacuum cleaner	155
Valve caps	56-57
Valves for inner tubes	25
VERAC	206
Vulcanizer	162, 164-165
Vulcanizing solutions	116, 125
Vulcaschrad	162
W	
wedges	197
Weights with built-in springs for steel rims	62
wheel tightening torque wrenches	196
Wire	195
Worm screw	127
Wrenches	172-173, 196
Y	
Yak	181-183

Direct lines for customer support:

Europe & Africa

Schrader s.a.s
48, rue de Salins - 25301 Pontarlier Cedex
Tel. +33 (0)3 81 38 56 27 - Fax direct +33 (0)3 81 38 56 81
E-mail : resale-info@schrader-pacific.fr

UK

Schrader Pacific Tire Hardware Solutions UK
Unit 1 Albion Buildings,
Kingfield Road, Coventry,
CV1 4NG - United Kingdom
Tel: +44 (0) 2476 550880 - Fax: +44 (0) 2476 220920
E-mail: reden@schrader-pacific.co.uk

Schrader s.a.s. - B.P. 29
48, rue de Salins - 25301 Pontarlier cedex
France
Tel. :+33 (0) 381 38 56 56 -
Fax : +33 (0) 381 46 41 42
E-Mail : general.info@schrader-pacific.fr

https://eshop.schrader-pacific.fr/

95089-GB All rights reserved - 09/2025- Uncontractual document and pictures / S.A.S. au capital de 4.712.183 Euros - 602 820 896 RCS Besançon